OneSteel Manufacturing
Pty Ltd (Administrators Appointed)

PRODUCT AND AVAILABILITY GUIDE

Hot Rolled Structural Steel

OCTOBER 2025 | Issue 15 | Australia

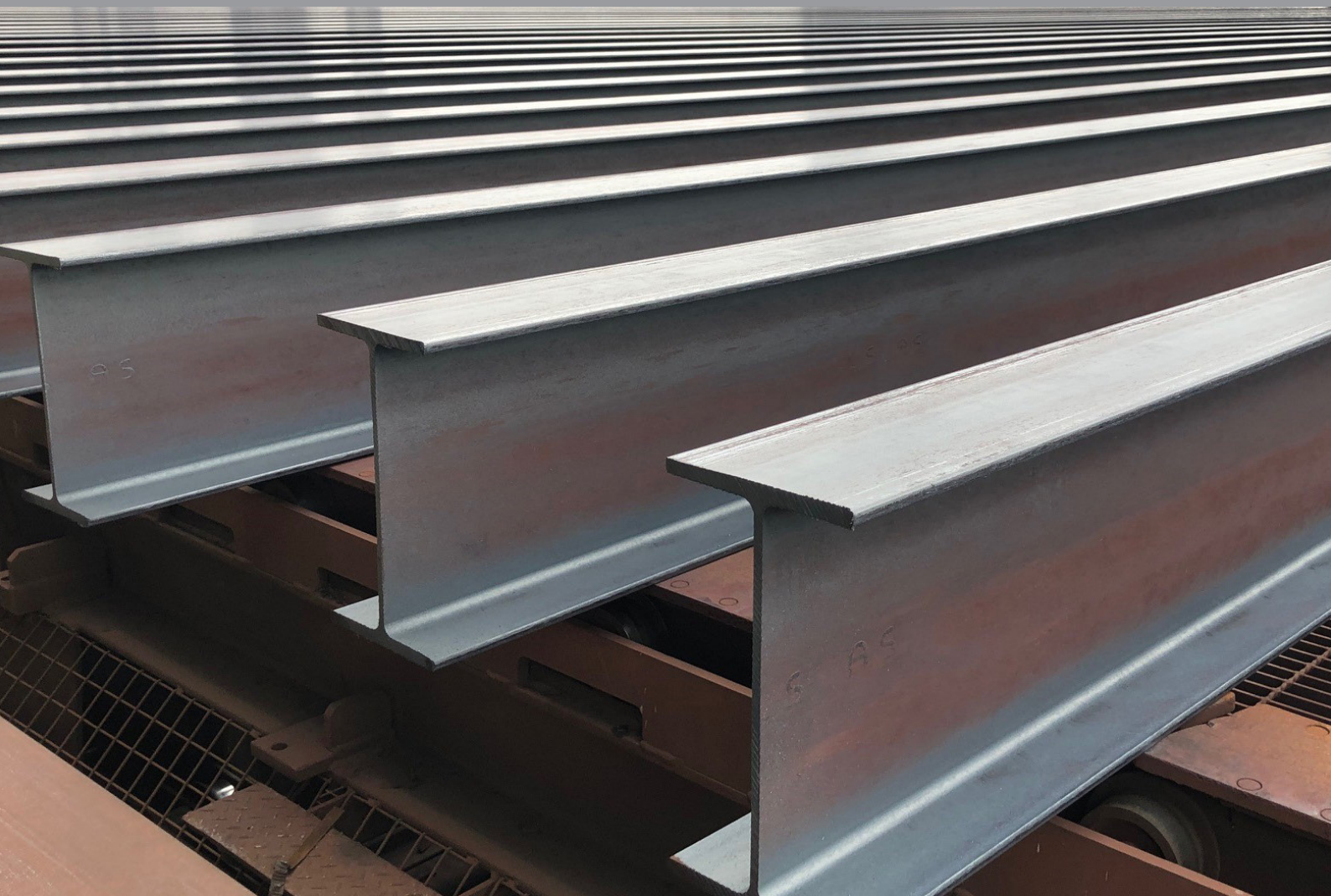

Supply Conditions

General

Order supply tolerance	+/- 20 %

Non-Standard Enquiries

Non-standard lengths and non-standard grades are by enquiry. Please refer your enquiry to your OneSteel Manufacturing representative.

Listed below is a guide of indicative MOQs and minimum extras.

Grade Availability	Nominal MOQ	Minimum Extra ($/t)
AS/NZS 3679.1 G350	24	$100
AS/NZS 3679.1 G300 L0	24	$150
AS/NZS 3679.1 G300 L15	By enquiry	By enquiry
AS/NZS 3679.1 G350 L0	By enquiry	By enquiry
AS/NZS 3679-1 G350 L15	By enquiry	By enquiry

Length Extra	Nominal MOQ	Minimum Extra ($/t)
Non-standard lengths from 9m to 18m	24	$150
Non-standard lengths >18m	24	By enquiry

Delivery Lead Times and Conditions

Delivery agreements are based on order patterns that support full truck loads (~24t) and demonstrated receival capabilities. Less than full truck load or inconsistent order patterns may require orders to be held, redirected to alternate locations or smoothed out.

Nominal Delivery Lead Times

Locations	Order Week	EIS Week	DIS Week
Adelaide, Melbourne, Perth, Sydney, Newcastle, Wollongong, Brisbane, Regional Victoria	Week 0	Week 1	Week 3
Launceston, Hobart, Regional New South Wales, Regional Queensland.	Week 0	Week 2	Week 4

* EIS - Earliest into store
* DIS - Delivery into store

Third Party Direct Deliveries

For direct delivery to a third party site please contact your OneSteel Manufacturing representative. Third party sites will require site inspection approval and are to be full truck load quantities. A minimum delivery surcharge of $75/t will apply to approved third party site deliveries.

Nominal Bundle Bar Count & Mass

Parallel Flange Channels

Section	kg/m	Each	Tonne	Each	Tonne	Each	Tonne	Each	Tonne	Each	Tonne	Each	Tonne	Each	Tonne
		9.0m		10.5m		12.0m		13.5m		15.0m		16.5m		18.0m	
180PFC	20.9	24	4.5	20	4.4	16	4.0	16	4.5	12	3.8	12	4.1	12	4.5
200PFC	22.9	24	4.9	20	4.8	16	4.4	16	4.9	12	4.1	12	4.5	12	4.9
230PFC	25.1	20	4.5	16	4.2	16	4.8	12	4.1	12	4.5	12	5.0	10	4.5
250PFC	35.5	12	3.8	12	4.5	8	3.4	8	3.8	8	4.3	8	4.7	8	5.1
300PFC	40.1	12	4.3	8	3.4	8	3.8	8	4.3	8	4.8	6	4.0	6	4.3
380PFC	55.2	10	5.0	8	4.6	6	4.0	6	4.5	6	5.0	4	3.6	4	4.0

Angles

Section	kg/m	Each	Tonne	Each	Tonne	Each	Tonne	Each	Tonne	Each	Tonne
		9.0m		10.5m		12.0m		13.5m		15.0m	
125x125x10	18.0	30	4.9	25	4.7	22	4.8	18	4.4	18	4.9
125x125x12	22.5	24	4.9	20	4.7	18	4.9	14	4.3	14	4.7
125x125x16	29.1	19	5.0	16	4.9	14	4.9	11	4.3	11	4.8
150x150x10	21.9	25	4.9	21	4.8	18	4.7	15	4.4	15	4.9
150x150x12	27.3	20	4.9	16	4.6	15	4.9	12	4.4	12	4.9
150x150x16	35.4	15	4.8	13	4.8	11	4.7	9	4.3	9	4.8
150x150x19	42.1	13	4.9	11	4.9	9	4.5	7	4.0	7	4.4
200x200x13	40.0	13	4.7	11	4.6	10	4.8	8	4.3	8	4.8
200x200x16	48.7	11	4.8	9	4.6	8	4.7	6	3.9	6	4.4
200x200x18	54.4	10	4.9	8	4.6	7	4.6	6	4.4	6	4.9
200x200x20	60.1	9	4.9	7	4.4	6	4.3	5	4.1	5	4.5
200x200x26	76.8	7	4.8	6	4.8	5	4.6	4	4.1	4	4.6

Universal Columns

Section	kg/m	Each	Tonne	Each	Tonne	Each	Tonne	Each	Tonne	Each	Tonne	Each	Tonne	Each	Tonne
		9.0m		10.5m		12.0m		13.5m		15.0m		16.5m		18.0m	
100UC	14.8	36	4.8			24	4.3			21	4.7				
150UC	23.4	21	4.4	18	4.4	15	4.2	15	4.7	12	4.2	12	4.6	10	4.2
	30.0	18	4.9	15	4.7	12	4.3	12	4.9	10	4.5	10	5.0	8	4.3
	37.2	12	4.0	12	4.7	10	4.5	8	4.0	8	4.5	8	4.9	6	4.0
200UC	46.2	12	5.0	10	4.9	8	4.4	8	5.0	6	4.2	6	4.6	6	5.0
	52.2	10	4.7	8	4.4	6	3.8	6	4.2	6	4.7	5	4.3	5	4.7
	59.5	8	4.3	8	5.0	6	4.3	6	4.8	5	4.5	5	4.9	4	4.3
250UC	72.9	6	3.9	6	4.6	4	3.5	4	3.9	4	4.4	4	4.8	3	3.9
	89.5	6	4.8	4	3.8	4	4.3	4	4.8	3	4.0	3	4.4	3	4.8
310UC	96.8	3	2.6	3	3.0	3	3.5	3	3.9	3	4.4	3	4.8	2	3.5
	118	3	3.2	3	3.7	3	4.2	3	4.8	2	3.5	2	3.9	2	4.2
	137	3	3.7	3	4.3	3	4.9	2	3.7	2	4.1	2	4.5	2	4.9
	158	3	4.3	2	3.3	2	3.8	2	4.3	2	4.7	1	2.6	1	2.8

By enquiry - availability will be advised upon request

Nominal Bundle Bar Count & Mass

Universal Beams

Section	kg/m	Each	Tonne	Each	Tonne	Each	Tonne	Each	Tonne	Each	Tonne	Each	Tonne	Each	Tonne
		9.0m		10.5m		12.0m		13.5m		15.0m		16.5m		18.0m	
150UB	14.0	36	4.5			24	4.0			20	4.2				
	18.0	30	4.9			20	4.3			16	4.3				
180UB	16.1	30	4.3			20	3.9			16	3.9				
	18.1	30	4.9			20	4.3			16	4.3				
	22.2	24	4.8			16	4.3			14	4.7				
200UB	18.2	30	4.9			22	4.8			18	4.9				
	22.3	18	3.6	18	4.2	18	4.8	16	4.8	14	4.7	12	4.4	12	4.8
	25.4	18	4.1	18	4.8	16	4.9	14	4.8	12	4.6	10	4.2	10	4.6
	29.8	18	4.8	16	5.0	12	4.3	12	4.8	10	4.5	10	4.9	8	4.3
250UB	25.7	20	4.6	18	4.9	16	4.9	14	4.9	12	4.6	10	4.2	10	4.6
	31.4	16	4.5	14	4.6	12	4.5	10	4.2	10	4.7	8	4.1	8	4.5
	37.3	14	4.7	12	4.7	10	4.5	8	4.0	8	4.5	8	4.9	7	4.7
310UB	32.0	16	4.6	14	4.7	12	4.6	10	4.3	10	4.8	8	4.2	8	4.6
	40.4	12	4.4	10	4.2	10	4.8	8	4.4	8	4.8	6	4.0	6	4.4
	46.2	12	5.0	10	4.9	8	4.4	8	5.0	7	4.9	6	4.6	6	5.0
360UB	44.7	12	4.8	10	4.7	7	3.8	7	4.2	7	4.7	6	4.4	6	4.8
	50.7	10	4.6	7	3.7	7	4.3	7	4.8	6	4.6	5	4.2	5	4.6
	56.7	7	3.6	7	4.2	7	4.8	6	4.6	5	4.3	5	4.7	4	4.1
410UB	53.7	10	4.8	7	3.9	6	3.9	6	4.3	6	4.8	5	4.4	5	4.8
	59.7	7	3.8	7	4.4	6	4.3	6	4.8	5	4.5	5	4.9	4	4.3
460UB	67.1	6	3.6	6	4.2	6	4.8	5	4.5	4	4.0	4	4.4	4	4.8
	74.6	6	4.0	6	4.7	5	4.5	4	4.0	4	4.5	4	4.9	3	4.0
	82.1	6	4.4	5	4.3	5	4.9	4	4.4	4	4.9	3	4.1	3	4.4
530UB	82.0	5	3.7	5	4.3	5	4.9	4	4.4	4	4.9	3	4.1	3	4.4
	92.4	5	4.2	5	4.9	4	4.4	4	5.0	3	4.2	3	4.6	3	5.0
610UB	101	4	3.6	4	4.2	3	3.6	3	4.1	3	4.5	3	5.0	1	1.8
	113	4	4.1	4	4.7	3	4.1	3	4.6	1	1.7	1	1.9	1	2.0
	125	4	4.5	3	3.9	3	4.5	1	1.7	1	1.9	1	2.1	1	2.3

Universal Bearing Piles

Section	kg/m	Each	Tonne	Each	Tonne	Each	Tonne	Each	Tonne	Each	Tonne	Each	Tonne	Each	Tonne
		9.0m		10.5m		12.0m		13.5m		15.0m		16.5m		18.0m	
200UBP	122	3	3.3	3	3.8	3	4.4	2	3.3	2	3.7	2	4.0	2	4.4
310UBP	78.8	3	2.1	3	2.5	3	2.8	3	3.2	3	3.5	3	3.9	3	4.3
	110	3	3.0	3	3.5	3	4.0	3	4.5	2	3.3	2	3.6	2	4.0
	149	3	4.0	2	3.1	2	3.6	2	4.0	2	4.5	1	2.5	1	2.7
	182	3	4.9	2	3.8	2	4.4	2	4.9	1	2.7	1	3.0	1	3.3

Note: Please direct all UBP enquiries to your OneSteel Manufacturing representative.

By enquiry - availability will be advised upon request

Minimum Rolling Quantity Sections

The following sections are categorised as Special Order sections with a minimum rolling quantity to be ordered for the section to roll. Please contact your OneSteel Manufacturing representative to enquire.

Parallel Flange Channels

Section	kg/m	Each	Tonne	Each	Tonne	Each	Tonne	Each	Tonne	Each	Tonne	Each	Tonne	Each	Tonne
		9.0m		10.5m		12.0m		13.5m		15.0m		16.5m		18.0m	
150PFC	17.7	30	4.78	24	4.46	20	4.25	20	4.78	16	4.25	16	4.67	12	3.82

Angles

Section	kg/m	Each	Tonne	Each	Tonne
		9.0m		12.0m	
150x90x8	14.3	36	4.63	27	4.63
150x90x10	17.3	32	4.98	24	4.98
150x90x12	21.6	24	4.67	18	4.67
150x100x10	18.0	30	4.86	22	4.75
150x100x12	22.5	24	4.86	18	4.86

By enquiry - availability will be advised upon request

OneSteel Manufacturing
Pty Ltd (Administrators Appointed)

For further information contact:
Customer Service Team
T: 1800 161 199 | **E:** OSM HRS Customer Service

This document contains information and images prepared by or on behalf of OneSteel Manufacturing Pty Ltd (Administrators Appointed) ABN 42 004 651 325. Reasonable efforts to ensure that the material was correct as at October 2025 which may be subject to change without notice. To the maximum extent permitted by law, OneSteel Manufacturing Pty Ltd and the Voluntary Administrators take no responsibility for any errors or omissions or reliance on the information contained within this flyer. The material is subject to copyright under the Copyright Act 1968 (Cth).

OneSteel Manufacturing
Pty Ltd (Administrators Appointed)

RAIL TRACK MATERIAL

Steel Rails and Trak-Lok® Steel Sleeper System

OCTOBER 2025

OneSteel Manufacturing (OSM) has significant experience and expertise in the production of steel rail and steel sleeper systems used extensively across the Australian railway industry. A series of major investments in our facilities has resulted in the consistent manufacture of high quality steel products.

OSM is proud to claim our steel rail and steel sleeper systems as Australian Made.

OSM gained accreditation to ISO 9001 for its manufacturing operations in 1990. Our Quality Management System is designed to allow us to deliver quality products in line with our "Promise to Customers" whilst not compromising on "Safety".

OSM has a dedicated Customer Service team available to support Rail & Trak-Lok® enquiries:

T: 1800 161 199

E: HRS@libertygfg.com

CONTENTS

STEEL RAILS 2
- Mechanical Properties 2
- Chemical Composition 3
- 68kg Rail Profile 4
- 60kg Rail Profile 5
- 53kg Rail Profile 6
- 50kg Rail Profile 7
- NZR50kg Rail Profile 8
- 47kg Rail Profile 9
- 41kg Rail Profile 10

TRAK-LOK® STEEL SLEEPER SYSTEMS 11
- Introduction 11
- Selection of Steel Sleepers 11
- Steel Sleeper Selection – Items for Consideration 12
- Steel Sleeper Typical Arrangement 12
- Rolled Steel Sleeper Sections 14
  - Chemical Composition 14
  - Mechanical Properties 14
  - Dimensional Tolerances For Steel Sleepers 15

STANDARD TRAK-LOK STEEL SLEEPER SYSTEM GUIDE 16
- Tasmania 16
- New South Wales 16
- Queensland 17
- South Australia 17
- Western Australia 18

TRAK-LOK 2 CLIPS 19
- Trak-Lok 2 Clips 19
- Trak-Lok 1 Clips 20

TRAK-LOK 2 LOCK-IN SHOULDERS 21

TRAK-LOK INSULATION PADS 22

TRAK-LOK SPACERS 24
- Insulated Spacers 24
- Non-Insulated Spacers 25
- Spacer Dimensions 28
- Common Spacer Configurations 28

TURNOUT BEARERS AND SPECIAL TRACKWORK 30

TRAK-LOK INSTALLATION AND REMOVAL TOOLS 30
- Spare Parts 33
- Motorised Application Machines 33

CAST SLEEPER PLATES 34
- Sleeper Plate Type 34
- Standards 34
- Hole Sizes 34
- Table of Sleeper Plates 34

STEEL RAILS

Rails are manufactured and supplied by the OneSteel Manufacturing (OSM) steelworks in South Australia. OSM produces both Plain Carbon and Head Hardened rails in a range of sizes suitable for the Australasian rail market.

OSM manufactures steel rails in accordance with the following OSM Rail Technical Agreement specifications.

RT19 – 68kg AS profile

RT23 – 41kg, 50kg and 60kg AS profile

RT24 – 50kg NZ profile

RT25 – 53kg

RT27 – 47kg

These specifications detail production of rails in accordance with Australian Standard AS 1085.1-2019 with clarifications and enhancements contained therein. A copy of these specifications are available on request.

Mechanical Properties

As Rolled Rail (Plain Carbon)

Product	0.2 % Proof Stress	Tensile Strength	Elongation	Surface Hardness
	MPa (min)	MPa (min)	% (min)	HB (min)
41kg Rail	-	700	8	-
47kg Rail	420	880	8	260
50kg Rail	420	880	8	260
NZR50kg Rail	420	940	8	260
53kg Rail	420	880	8	260
60kg Rail	420	880	8	260
68kg Rail	420	880	8	260

Head Hardened Rail

Product	0.2 % Proof Stress	Tensile Strength	Elongation	Surface Hardness
	MPa (min)	MPa (min)	% (min)	HB (min)
50kg Rail	780	1130	9	340
NZR50kg Rail	780	1130	9	340
53kg Rail	780	1130	9	340
60kg Rail	780	1130	9	340
68kg Rail	780	1130	9	340

47kg head hardened rail availability should be enquired through the OSM sales team.

Chemical Composition

As Rolled Rail (Plain Carbon)

Product	Element						
	Carbon %	Manganese %	Silicon %	Phosphorous %	Sulfur %	Aluminium %	Nitrogen %
41kg Rail	0.53 to 0.69	0.60 to 0.95	0.15 to 0.58	0.025 max	0.025 max	0.005 max	0.010 max
47kg Rail	0.65 to 0.82	0.70 to 1.25	0.15 to 0.58	0.025 max	0.025 max	0.005 max	0.010 max
50kg Rail	0.65 to 0.82	0.70 to 1.25	0.15 to 0.58	0.025 max	0.025 max	0.005 max	0.010 max
NZR50kg Rail	0.72 to 0.82	1.00 to 1.25	0.15 to 0.58	0.025 max	0.025 max	0.005 max	0.010 max
53kg Rail	0.65 to 0.82	0.70 to 1.25	0.15 to 0.58	0.025 max	0.025 max	0.005 max	0.010 max
60kg Rail	0.65 to 0.82	0.70 to 1.25	0.15 to 0.58	0.025 max	0.025 max	0.005 max	0.010 max
68kg Rail	0.65 to 0.82	0.70 to 1.25	0.15 to 0.58	0.025 max	0.025 max	0.005 max	0.010 max

Head Hardened Rail

Product	Element						
	Carbon %	Manganese %	Silicon %	Phosphorous %	Sulfur %	Aluminium %	Nitrogen %
50kg Rail	0.65 to 0.82	0.70 to 1.25	0.15 to 0.58	0.025 max	0.025 max	0.005 max	0.010 max
NZR50kg Rail	0.65 to 0.82	0.70 to 1.25	0.15 to 0.58	0.025 max	0.025 max	0.005 max	0.010 max
53kg Rail	0.65 to 0.82	0.70 to 1.25	0.15 to 0.58	0.025 max	0.025 max	0.005 max	0.010 max
60kg Rail	0.65 to 0.82	0.70 to 1.25	0.15 to 0.58	0.025 max	0.025 max	0.005 max	0.010 max
68kg Rail	0.65 to 0.82	0.70 to 1.25	0.15 to 0.58	0.025 max	0.025 max	0.005 max	0.010 max

68kg Rail Profile

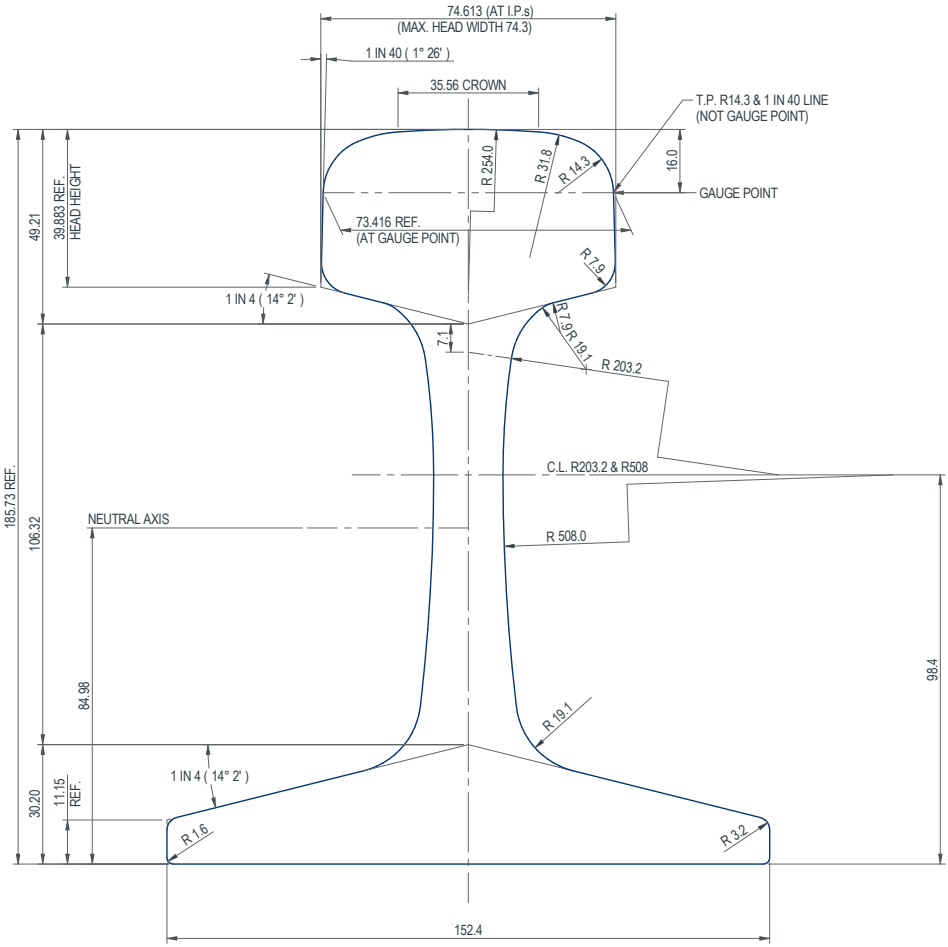

68kg Rail			
Area of Head	3,118 mm^2	Horizontal Axis	
Area of Web	2,350 mm^2	Second Moment of Area	39.4 $10^6 mm^4$
Area of Foot	3,147 mm^2	Section Modulus Head	390.7 $10^3 mm^3$
Total Area	8,615 mm^2	Section Modulus Foot	463.2 $10^3 mm^3$
Calculated Mass	67.6 kg/m	Vertical Axis	
Maximum Rail Length	25.0 m	Second Moment of Area	6.03 $10^6 mm^4$

60kg Rail Profile

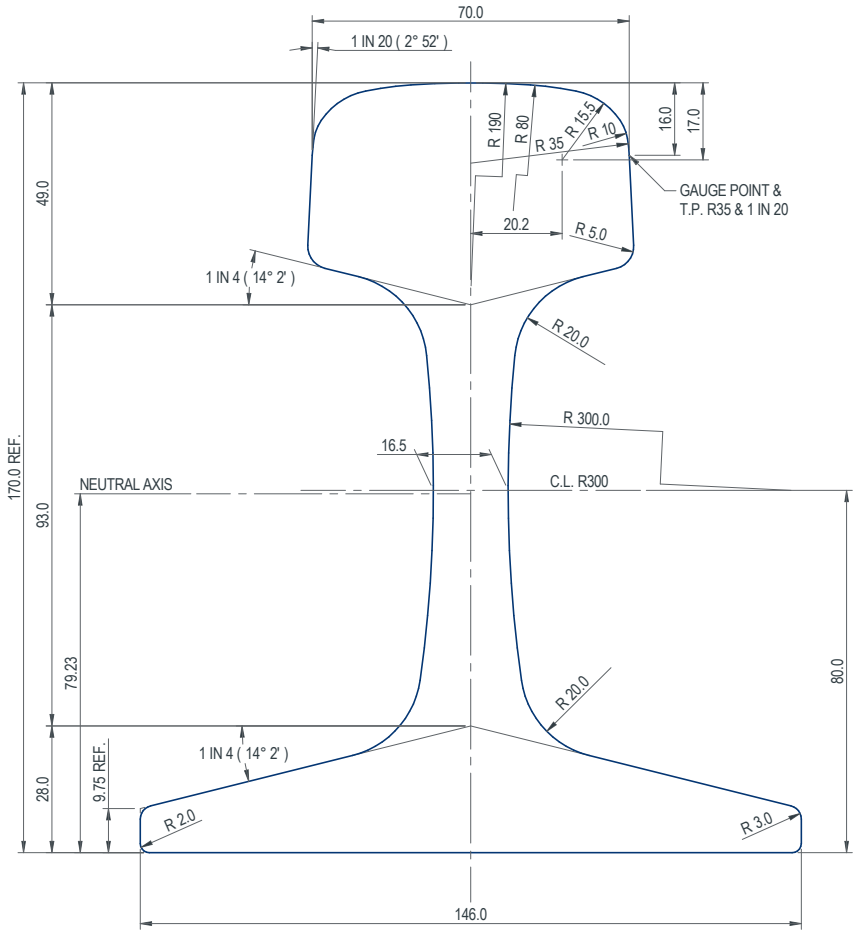

60kg Rail			
Area of Head	2,999 mm^2	Horizontal Axis	
Area of Web	1,974 mm^2	Second Moment of Area	29.3 $10^6 mm^4$
Area of Foot	2,752 mm^2	Section Modulus Head	322.4 $10^3 mm^3$
Total Area	7,725 mm^2	Section Modulus Foot	369.3 $10^3 mm^3$
Calculated Mass	60.7 kg/m	Vertical Axis	
Maximum Rail Length	27.5 m	Second Moment of Area	4.90 $10^6 mm^4$

53kg Rail Profile

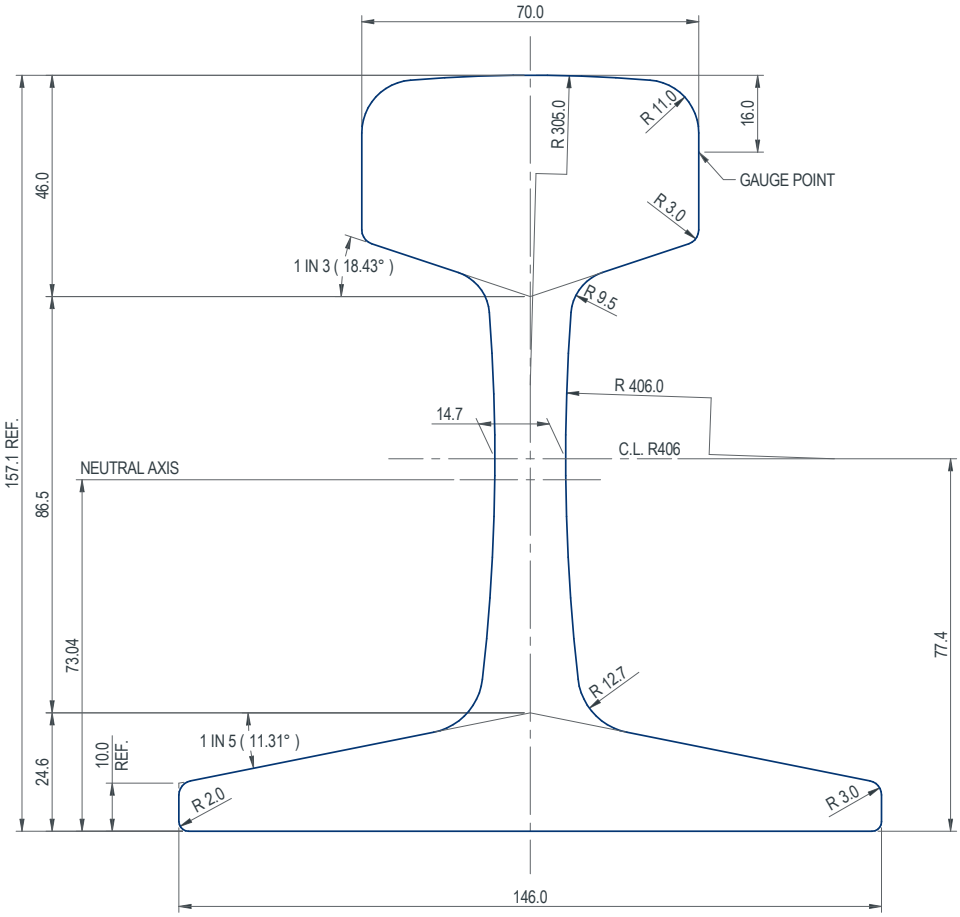

53kg Rail			
Area of Head	2,721 mm^2	Horizontal Axis	
Area of Web	1,520 mm^2	Second Moment of Area	22.8 $10^6 mm^4$
Area of Foot	2,522 mm^2	Section Modulus Head	271.7 $10^3 mm^3$
Total Area	6,763 mm^2	Section Modulus Foot	312.7 $10^3 mm^3$
Calculated Mass	53.2 kg/m	Vertical Axis	
Maximum Rail Length	27.5 m	Second Moment of Area	4.54 $10^6 mm^4$

50kg Rail Profile

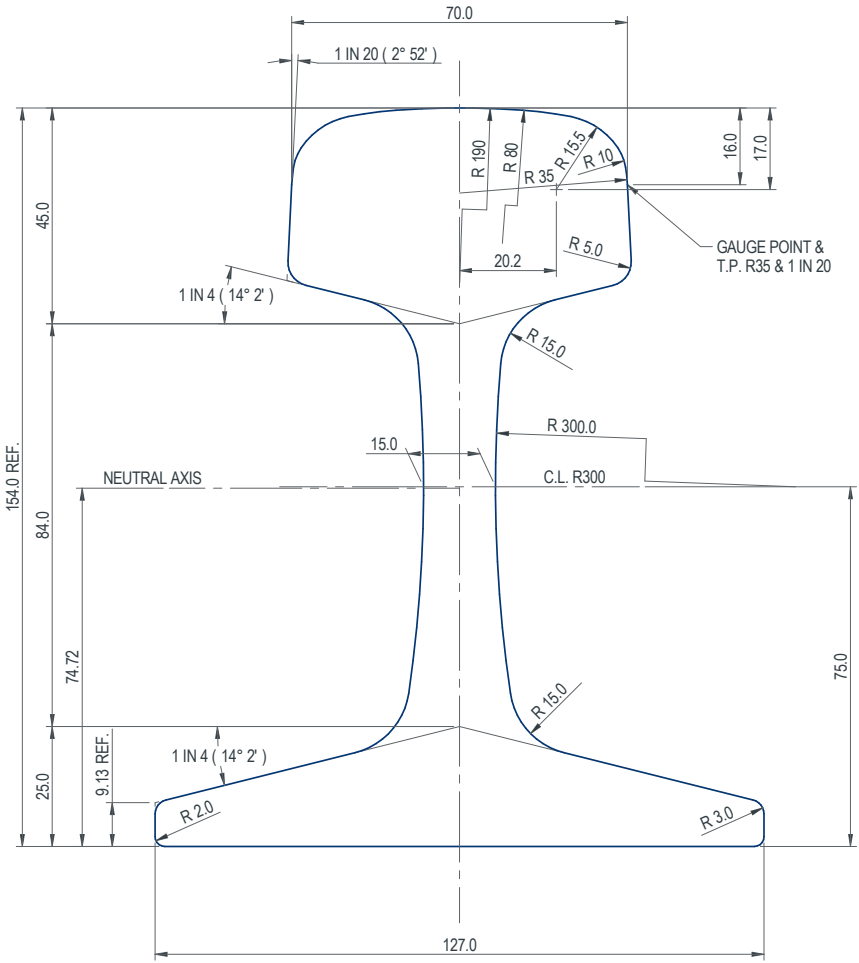

50kg Rail			
Area of Head	2,710 mm^2	Horizontal Axis	
Area of Web	1,578 mm^2	Second Moment of Area	20.1 $10^6 mm^4$
Area of Foot	2,163 mm^2	Section Modulus Head	253.5 $10^3 mm^3$
Total Area	6,451 mm^2	Section Modulus Foot	269.1 $10^3 mm^3$
Calculated Mass	50.7 kg/m	Vertical Axis	
Maximum Rail Length	27.5 m	Second Moment of Area	3.26 $10^6 mm^4$

NZR50kg Rail Profile

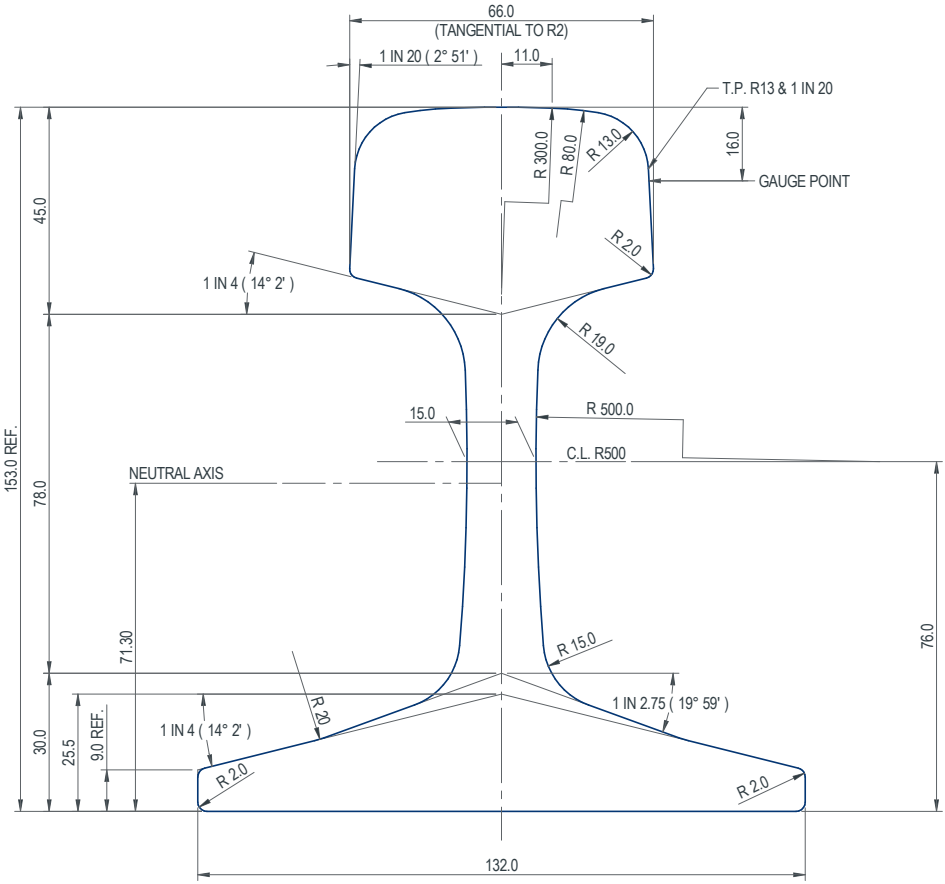

NZR50kg Rail			
Area of Head	2,536 mm^2	Horizontal Axis	
Area of Web	1,416 mm^2	Second Moment of Area	19.7 $10^6 mm^4$
Area of Foot	2,453 mm^2	Section Modulus Head	241.4 $10^3 mm^3$
Total Area	6,405 mm^2	Section Modulus Foot	276.6 $10^3 mm^3$
Calculated Mass	50.3 kg/m	Vertical Axis	
Maximum Rail Length	27.5 m	Second Moment of Area	3.39 $10^6 mm^4$

47kg Rail Profile

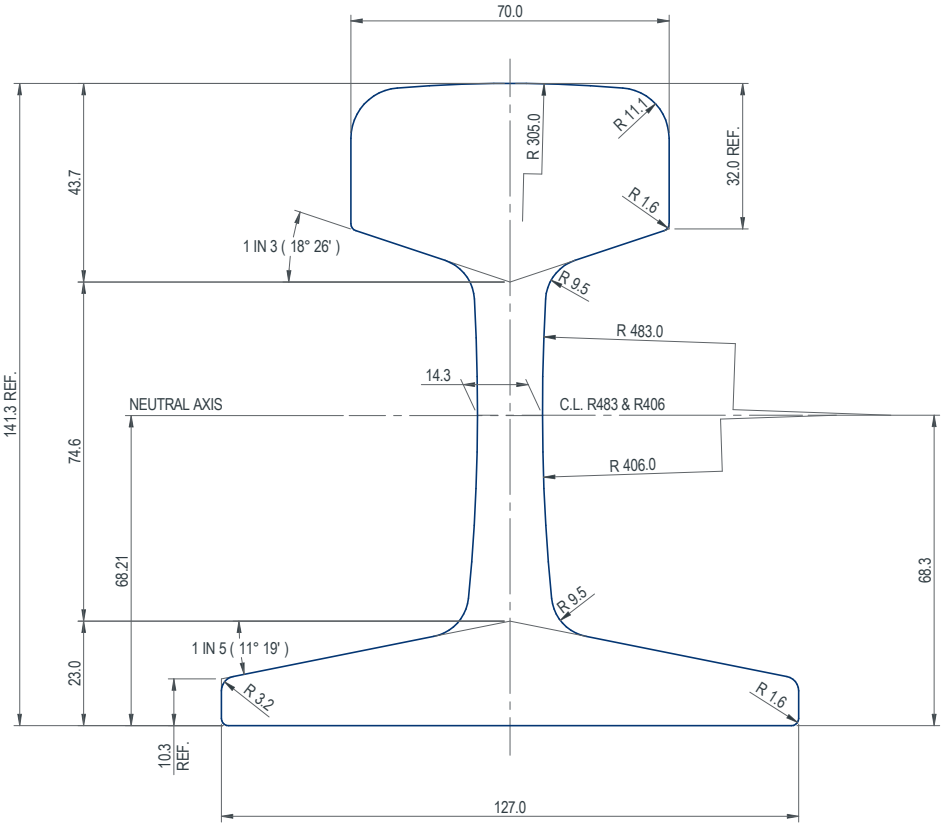

47kg Rail			
Area of Head	2,561 mm^2	Horizontal Axis	
Area of Web	1,235 mm^2	Second Moment of Area	15.92 $10^6 mm^4$
Area of Foot	2,110 mm^2	Section Modulus Head	227.1 $10^3 mm^3$
Total Area	5,906 mm^2	Section Modulus Foot	233.4 $10^3 mm^3$
Calculated Mass	46.4 kg/m	Vertical Axis	
Maximum Rail Length	27.5 m	Second Moment of Area	3.23 $10^6 mm^4$

41kg Rail Profile

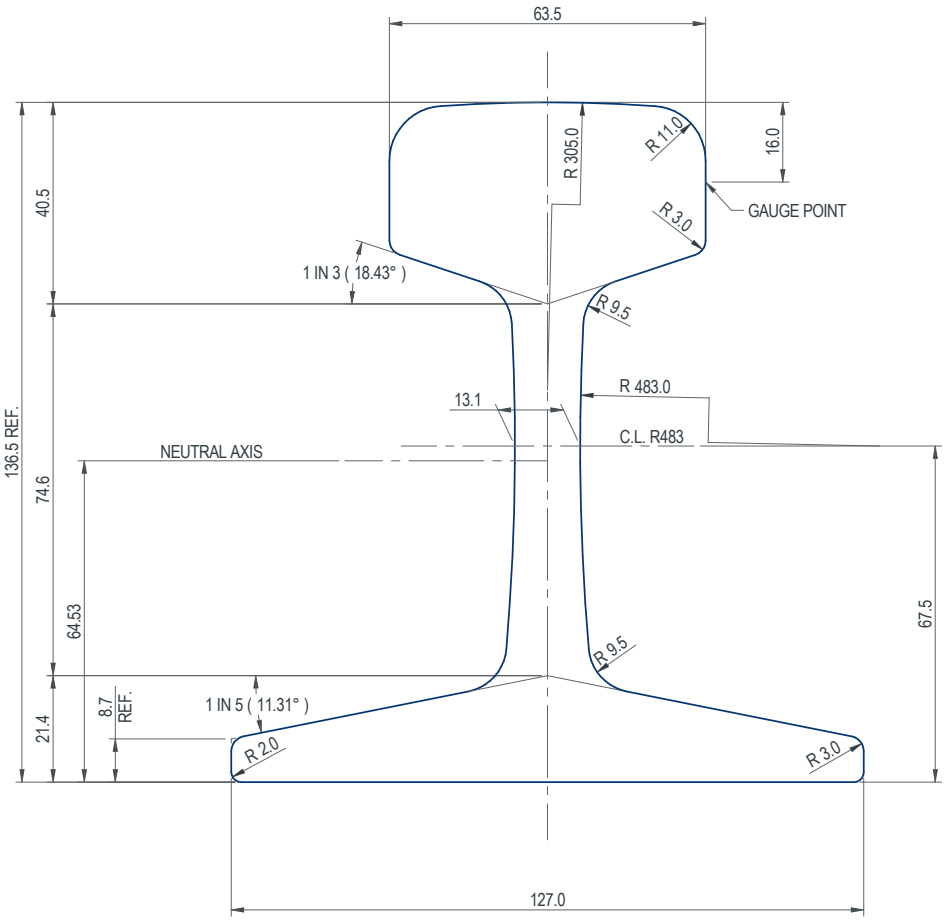

41kg Rail			
Area of Head	2,162 mm^2	Horizontal Axis	
Area of Web	1,122 mm^2	Second Moment of Area	13.27 $10^6 mm^4$
Area of Foot	1,908 mm^2	Section Modulus Head	184.4 $10^3 mm^3$
Total Area	5,192 mm^2	Section Modulus Foot	204.5 $10^3 mm^3$
Calculated Mass	40.8 kg/m	Vertical Axis	
Maximum Rail Length	27.5 m	Second Moment of Area	2.67 $10^6 mm^4$

TRAK-LOK® STEEL SLEEPER SYSTEMS

Introduction

Trak-Lok Steel Sleeper Systems are manufactured from OneSteel Manufacturing (OSM) rolled "M" sleeper sections and incorporates the Trak-Lok resilient fastening system that has been developed specifically for use with steel sleepers.

Steel sleepers are support members that form part of the structure of the railway track. The steel sleepers are embedded into ballast and provide support to the rails above. The steel sleepers tie the rails together maintaining gauge and rail position whilst resisting lateral and longitudinal movement of the rail.

Recent developments in sleeper design have seen the introduction of the Deep End Spade (DES), offering improved lateral resistance to the sleeper system and a M12 sleeper offering increased load capability.

The Trak-Lok 2 resilient clip secures the rail to the sleeper in conjunction with the appropriate Trak-Lok "Lock In Shoulder".

The Trak-Lok fastening system also includes an optional range of Insulation Pads for various rail sizes that provide electrical insulation between rail and steel sleeper which ensures the correct operation of track signalling and traction current return systems.

The Trak-Lok fastening system also has a large range of Spacers available to enable the use of smaller rail in rail seats designed for larger rail sizes that may be employed in the future.

Selection of Steel Sleepers

Australian Standards AS 1085 Part 17 - Steel Sleepers and AS 1085 Part 19 - Resilient Fastening Assemblies have been developed as a means for the selection of steel sleepers and their associated resilient fastenings. The procedures specified in these standards have two main parts:

1. Firstly a design procedure that enables the calculation of design vertical and lateral rail seat loadings for the proposed sleeper (if actual loading conditions are not known); and
2. Secondly the standards specify a series of laboratory test procedures, some of which utilise the calculated design or actual loadings, to determine the performance of the proposed sleeper systems against critical performance requirements. These critical performance requirements include sleeper fatigue, overload strength, rail fastening capability and rail insulation.

In addition to the critical performance requirements specified above, other factors should also be considered, including how they are to be installed in track, assembly and disassembly of components, compatibility with common track maintenance activities and track stability.

For the first time user, in-track trials are recommended so that experience may be gained regarding installation procedure, general track performance, maintenance techniques required and general overall costs. By both in-track testing and testing in the laboratory to criteria as determined in accordance with the Australian Standards, confidence may be gained as to whether any particular sleeper system is suitable for an intended purpose.

Steel Sleeper Selection – Items for Consideration

When selecting a particular steel sleeper for your application the following items need to be determined:

1. The size of the sleeper, ie M7.5, M8.5, M10 or M12 sleeper section. What traffic task may need to be catered for now and in the future?
2. Track gauge required to be achieved including any gauge widening;
3. What rail size is the steel sleeper to be designed for, and are Spacers required? Steel sleepers may be supplied to fasten most common rail sizes. By using Spacers it is possible to fasten existing generally small size rail in larger rail seats thus enabling future upgrading of the track to be carried out without the need to resleeper the track;
4. Is the rail seat to be canted at 1 in 20, flat, or other?
5. Is the track required to be insulated or non-insulated? What signalling task may be required in the future? Note that it is possible to convert M7.5 non-insulated track to insulated track by the use of a special Lock In Shoulder and appropriate Insulation Pads but this combination may lead to earlier fatigue failure of the steel sleeper and/or its components;
6. Improved lateral resistance for tight curves - Deep End Spade (DES).

The details presented hereafter detail the commonly used components and configurations for Trak-Lok Steel Sleeper Systems, however other specific requirements may also be able to be accommodated. Please contact an OSM Trak-Lok representative for further details.

Steel Sleeper Typical Arrangement

1. Insulated

(Shown with a 1 in 20 Canted Insulated Rail Seat)

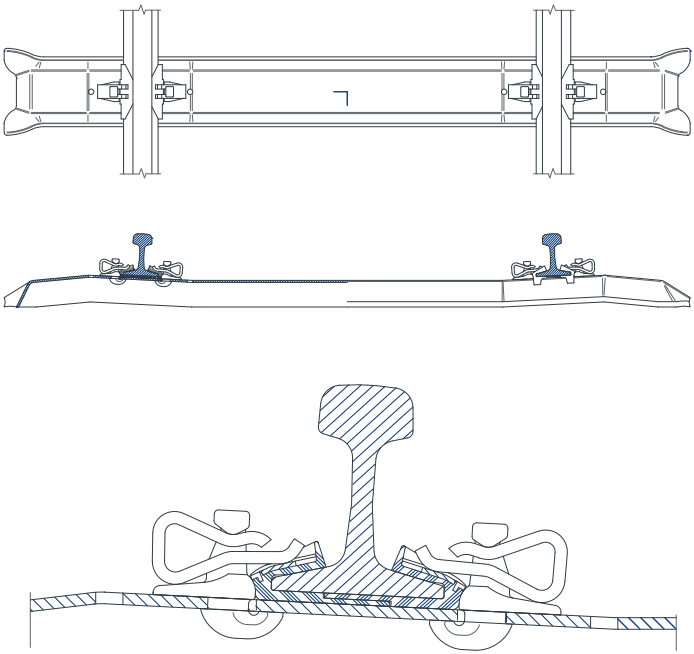

2. Non-Insulated

(Shown with Flat Non-Insulated Rail Seat)

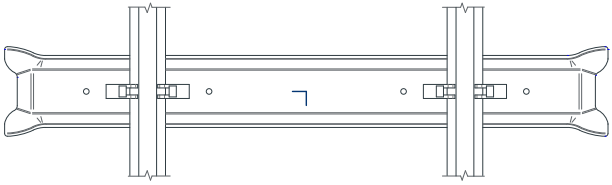

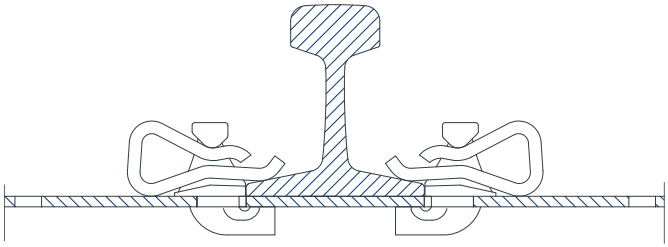

3. Deep End Spade (DES)

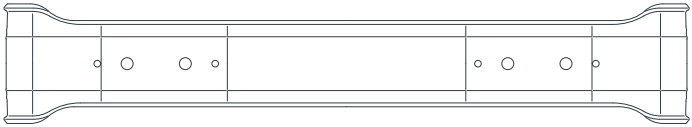

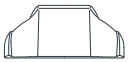

Rolled Steel Sleeper Sections

Steel sleeper sections are manufactured to the following sizes and in accordance with AS 1085.17-2003.

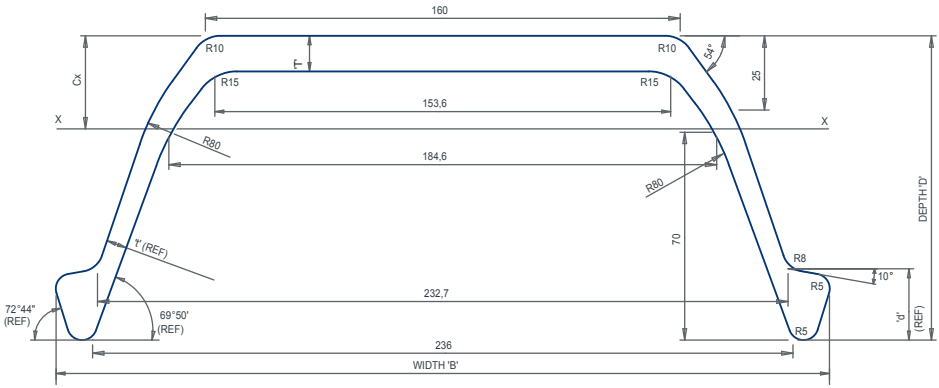

Designation	Mass	T	t	D	d	B	Section Area	Centre of Area (from top)	About x -x		
									I	Z top	Z bottom
	kg/m	mm	mm	mm	mm	mm	mm^2	mm	10^6mm^4	10^3mm^3	10^3mm^3
M7.5	21.09	7.5	5.35	98.0	19.5	258.4	2,687	31.71	2.943	92.81	44.4
M8.5	23.14	8.5	5.69	99.0	20.5	258.7	2,948	31.43	3.217	102.35	47.61
M10	26.23	10	6.21	100.5	22.0	259.6	3,341	31.26	3.639	116.41	52.56
M12	30.36	12	6.9	102.5	24.0	260.8	3,867	31.35	4.208	134.24	59.14

Chemical Composition

Product	Element				
	Carbon % , max	Manganese % , max	Silicon % , max	Phosphorous % , max	Sulfur % , max
Steel Sleeper Section	0.24	1.5	0.5	0.04	0.04

Mechanical Properties

Product	Yield Strength MPa, min
Steel Sleeper Section	250

Dimensional Tolerances For Steel Sleepers

Item No.	Characteristic	Tolerance as per AS1085.17
(a)	Overall length of sleeper	+/- 10 mm
(b)	Individual cross-sectional dimensions of sleepers other than those specified in Items (c), (d) and (e)	+/- 3 mm
(c)	Internal width of sleeper at the section toe, B	+/- 5 mm
(d)	Overall depth of sleeper section, D	+/- 2 mm
(e)	Thickness of the sleeper top, T	+0.5 mm, -0.3 mm
(f)	Inward cant of rail seats: (i) hot-pressed (ii) cold-pressed	 +/- 0.5° +/- 0.2°
(g)	Rail seat flatness (flatness tolerance shall be measured in accordance with AS/NZS 1100.101) (no convexity allowed) Note: Where this tolerance is not met by special sleepers such as turnout and splay bearers, the flatness may be agreed with the purchaser.	0.0 to 1.0 mm
(h)	Differential tilt angle of rail seats in the direction of rail	+/- 0.6°
(i)	Track gauge, measured between gauge points of rails with the rail placed hard against the outer shoulder	+/- 2 mm
(j)	Distance between inside walls of inner and outer shoulders of each rail measured 2mm above the rail seat	+1.0 mm, -0.0 mm
(k)	Inside walls of inner and outer housings of each rail seat to be parallel to longitudinal axis of each rail	+/- 0.2°
(l)	Sleeper longitudinal straightness (over the nominally straight portion in plan view)	6mm/m
(m)	Distance between outer edges of external fixing holes	+/- 1 mm
(n)	Distance between outer edges of fixing holes of the same rail seat	+/- 0.5 mm

STANDARD TRAK-LOK STEEL SLEEPER SYSTEM GUIDE

Below is a standard list of steel sleeper configurations with the main rail size that the sleeper has been designed for and the applicable Lock In Shoulder, Insulated Pad, Clip and Spacer.

Tasmania

Sleeper Section	Gauge	Part No	Sleeper Centreline Length	Flat or Cant	Insulation Requirements		Clip No	LIS No	Spacer	Major Rail Size	Sleeper Drawing Number
					Ins or NI	Ins Part No					
M7.5	Narrow (1067mm)	7.5SN12207TSS	2010mm	Cant	NI	-	B296	2411	-	AS41	12207
M7.5	Narrow + 6mm (1073mm)	7.5SN12235TSS	2010mm	Cant	NI	-	B296	2411	-	AS41	12235
M7.5	Narrow + 12mm (1079mm)	7.5SN12236TSS	2010mm	Cant	NI	-	B296	2411	-	AS41	12236
M8.5	Narrow (1067mm)	8.5NG12136TSS	2060mm	Cant	Ins	2213	B296	2409	-	AS41	12136
M8.5	Narrow (1067mm)	8.5NG12180TSS	2060mm	Cant	NI	-	B296	2410	-	AS41	12180
M8.5	Narrow + 6mm (1073mm)	8.5NG12405TSS	2060mm	Cant	Ins	2213	B296	2409	-	AS41	12405
M8.5	Narrow + 12mm (1079mm)	8.5NG12406TSS	2060mm	Cant	Ins	2213	B296	2409	-	AS41	12406

New South Wales

Sleeper Section	Gauge	Part No	Sleeper Centreline Length	Flat or Cant	Insulation Requirements		Clip No	LIS No	Spacer	Major Rail Size	Sleeper Drawing Number
					Ins or NI	Ins Part No					
M7.5	Standard (1435mm)	7.5SG12105TSS	2430mm	Cant	NI	-	B296	2411	-	AS47	12105
M7.5	Standard (1435mm)	7.5SG2072TSS	2430mm	Cant	NI	-	B296	2411	-	AS53	2072
M8.5	Standard (1435mm)	8.5SG12125TSS	2430mm	Cant	Ins	2212	B296	2409	-	AS53	12125
M8.5	Standard (1435mm)	8.5SG12144TSS	2430mm	Cant	Ins	2213	B296	2409	-	AS47	12144
M8.5	Standard (1435mm)	8.5SG12209TSS	2430mm	Cant	NI	-	B296	2410	-	AS47/50	12209
M8.5	Standard (1435mm)	8.5SG12142TSS	2430mm	Cant	NI	-	B296	2410	-	AS53	12142
M10	Standard (1435mm)	10SG12195TSS	2430mm	Cant	Ins	2212	B296	2408	-	AS53	12195
M10	Standard (1435mm)	10SG12126TSS	2430mm	Cant	NI		B296	2408	-	AS60	12126

Queensland

Sleeper Section	Gauge	Part No	Sleeper Centreline Length	Flat or Cant	Insulation Requirements		Clip No	LIS No	Spacer	Major Rail Size	Sleeper Drawing Number
					Ins or NI	Ins Part No					
M7.5	Narrow (1067mm)	7.5NG2065TSS	2060mm	Flat	NI	-	B296	2411	-	AS41	2065
M7.5	Narrow (1067mm)	7.5NG2068TSS	2060mm	Flat	NI	-	B296	2411	2529	AS41 & AS50	2068
M8.5	Narrow + 7mm or +13 (1074mm and 1080mm)	8.5NG12393TSS	2060mm	Flat	NI	-	B296	2410	2529	AS41	12393
M8.5	Narrow (1067mm)	8.5NG2074TSS	2060mm	Flat	Ins	2214	B296	2409	-	AS41 & AS50	2074
M8.5	Narrow (1067mm)	8.5NG2089TSS	2060mm	Cant	Ins	2214	B296	2409	-	AS41 & AS50	2089

South Australia

Sleeper Section	Gauge	Part No	Sleeper Centreline Length	Flat or Cant	Insulation Requirements		Clip No	LIS No	Spacer	Major Rail Size	Sleeper Drawing Number
					Ins or NI	Ins Part No					
M10	Narrow (1067mm)	10NG12152TSS	2060mm	Cant	Ins	2213	B296	2408	-	AS41	12152
M7.5	Standard (1435mm)	7.5SG12402TSS	2430mm	Cant	NI	-	B296	2411	-	AS60	12402
M10	Standard (1435mm)	10SG12126TSS	2430mm	Cant	NI	-	B296	2406	-	AS60	12126
M7.5	Narrow (1067mm)	7.5SN12129TSS	2010mm	Flat	NI	-	B296	2411	-	AS31	12129
M7.5	Narrow (1067mm)	7.5SN12391TSS	2010mm	Cant	NI	-	B296	2411	-	AS53	12391

Western Australia

Sleeper Section	Gauge	Part No	Sleeper Centreline Length	Flat or Cant	Insulation Requirements		Clip No	LIS No	Spacer	Major Rail Size	Sleeper Drawing Number
					Ins or NI	Ins Part No					
M7.5	Narrow (1067mm)	7.5SN12185TSS	2010mm	Cant	NI	-	B286	2411	-	AS41	12185
M7.5	Narrow (1067mm)	7.5SN12187TSS	2010mm	Cant	NI	-	B286	2411	-	AS50	12187
M7.5	Narrow (1067mm)	7.5SN12410TSS	2010mm	Cant	NI	-	B286	2411	-	AS47/50	12410
M7.5	Narrow (1067mm)	7.5SN12260TSS	2010mm	Cant	NI	-	B286	2411	-	RE66	12260
M7.5	Narrow + 6mm (1073mm)	7.5SN12202TSS	2010mm	Cant	NI	-	B286	2411	-	AS50	12202
M8.5	Narrow (1067mm)	8.5NG2095TSS	2060mm	Cant	Ins	2213	B296	2409	-	AS41	2095
M8.5	Narrow (1067mm)	8.5NG12120TSS	2060mm	Cant	Ins	2213	B296	2409	-	AS50	12120
M8.5	Narrow (1067mm)	8.5NG12369TSS	2060mm	Cant	Ins	2212	B296	2409	-	AS60	12369
M8.5	Narrow + 6mm (1073mm)	8.5NG12160TSS	2060mm	Cant	Ins	2213	B296	2409	-	AS50	12160
M10	Narrow (1067mm)	10NG12152TSS	2060mm	Cant	Ins	2213	B296	2408	-	AS41	12152
M7.5	Standard (1435mm) (1434mm with AS50)	7.5SG12231TSS	2430mm	Cant	NI	-	B286	2411	2529	AS41 & AS47/50	12231
M7.5	Standard (1435mm)	7.5SG2096TSS	2430mm	Cant	NI	-	B286	2411	-	AS41	2096
M7.5	Standard (1435mm)	7.5SG2097TSS	2430mm	Cant	NI	-	B286	2411	-	AS50	2097
M7.5	Standard + 6mm (1441mm)	7.5SG12157TSS	2430mm	Cant	NI	-	B286	2411	-	AS50	12157
M8.5	Standard (1435mm)	8.5SG12171TSS	2430mm	Cant	Ins	2213	B296	2409	-	AS41	12171
M8.5	Standard (1435mm)	8.5SG2098TSS	2430mm	Cant	Ins	2213	B296	2409	-	AS50	2098
M8.5	Standard (1435mm)	8.5SG12266TSS	2430mm	Cant	Ins	2212	B296	2409	-	AS60	12266
M8.5	Standard (1435mm)	8.5SG12232TSS	2430mm	Cant	Ins	2214	B296	2409	-	AS41 & AS47/50	12232
M8.5	Standard + 6mm (1441mm)	8.5SG12158TSS	2430mm	Cant	Ins	2213	B296	2409	-	AS50	12158

TRAK-LOK 2 CLIPS

Trak-Lok Steel Sleeper Systems supplied by OneSteel Manufacturing (OSM) incorporate the Trak-Lok Fastening System which has been specifically developed for use with steel sleepers. The Trak-Lok B296 clip is most commonly used. A lower toe load version, the Trak-Lok B286 clip, is also used in some applications. Trak-Lok clips are manufactured from a high silicon spring steel and are hot formed, quenched and tempered in a semi-automatic process. All clips are manufactured in accordance with AS 1085.19-2003.

OSM also manufacture and supply as spares the superseded Trak-Lok 1 clips that were used on the Trak-Lok 1 Steel Sleepers (now obsolete).

Trak-Lok 2 Clips

Designation	Where Used	Drawing
B286 Note 1	For use with Insulated and Non-Insulated M7.5, M8.5 and M10 Steel Sleepers. Material thickness = 8mm Nominal Toe Load = 9kN Nominal Deflection = 16mm	
B296 Note 1	For use with Insulated and Non-Insulated M7.5, M8.5 and M10 Steel Sleepers. Material thickness = 9mm Nominal Toe Load = 10kN Nominal Deflection = 16mm	
JB296 Note 1	For use with Insulated and Non-Insulated M7.5, M8.5 and M10 Steel Sleepers at Insulated Joints. Material thickness = 9mm	
Zip9 Note 2	For use with Insulated and Non-Insulated M7.5, M8.5 and M10 Steel Sleepers. Material thickness = 9mm Nominal Toe Load = 10kN Nominal Deflection = 16mm	

Note 1 Australian Design No. 142843. All rights reserved.
Note 2 Australian Patent No. 774152. All rights reserved.

Trak-Lok 1 Clips

Designation	Where Used	Drawing
S187L	Used with Non-Insulated M7.5 and M8.5 Trak-Lok 1 Steel Sleepers. Material thickness = 8mm Nominal Toe Load = 9kN Nominal Deflection = 10.5mm	
S193L	Used with Insulated M7.5, M8.5 and M10 Trak-Lok 1 Steel Sleepers. Material thickness = 9mm Nominal Toe Load = 10kN Nominal Deflection = 13.5mm	
S195L	Used with Non-Insulated M6.5 Trak-Lok 1 Steel Sleepers. Material thickness = 7mm Nominal Toe Load = 8kN Nominal Deflection = 10.5mm	Note: Use S187L Clip as replacement.
S197L	Used with Non-Insulated M7.5 and M8.5 Trak-Lok 1 Steel Sleepers. Material thickness = 9mm Nominal Toe Load = 10kN Nominal Deflection = 10.5mm	

TRAK-LOK 2 LOCK-IN SHOULDERS

The Trak-Lok 2 clips used in this system are held in position by purpose designed lock-in shoulders (LIS's) which hold the rail in the rail seat and ensure the clip exerts the required toe load to the rail. The Trak-Lok 2 LIS's are specifically designed so that they cannot be dislodged once the rails are positioned in place. Different types of LIS's are used for insulated and non-insulated sleepers.

All LIS's are manufactured in accordance with AS 1085.19-2003.

Part Number	Where Used	Drawings
2411 Note 1	M7.5 Non-Insulated Steel Sleeper.	
2410 Note 1	M8.5 Non-Insulated Steel Sleepers.	
2406 Note 1	M10 Non-Insulated Steel Sleepers.	
2409 Note 2	M8.5 Insulated Steel Sleepers.	
2408 Note 2	M10 Insulated Steel Sleepers.	
2425 Note 2	Conversion of M7.5 Non-Insulated to M7.5 Insulated Steel Sleepers.	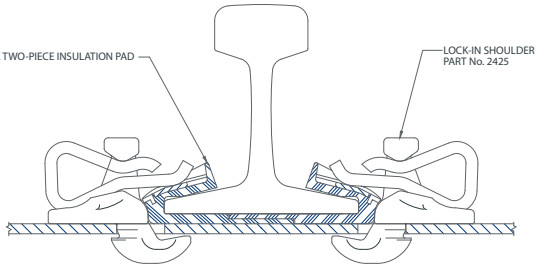 NON-INSULATED FASTENING ARRANGEMENT CONVERTED TO INSULATED FASTENING ARRANGEMENT

Note 1 Australian Design No. 129140. All rights reserved.
Note 2 Australian Design No. 129139. All rights reserved.

TRAK-LOK INSULATION PADS

For rail fastening assemblies which require the rail to be insulated for signalling and return traction current control purposes, OneSteel Manufacturing (OSM) supplies a range of two-piece insulation pads. These pads have been developed to provide high electrical resistance, good mechanical strength and durability. Insulation pads are available for most common Australian rail foot sizes. Two-piece insulation pads for use at bar type fishplated joints are also available and some pads also have a feature that allows minor adjustment of track gauge or allows the use of different rail sizes.

Trak-Lok Two-Piece Insulation pads are manufactured from two different materials to give two ranges of mechanical strength. Most insulation pads supplied are manufactured from High Density Polyethylene (HDPE). However, where high lateral forces are applied at the rail seat and higher mechanical strength is required, then insulation pads manufactured from Nylon 6 may be supplied.

All Insulation Pads are manufactured in accordance with AS 1085.19-2003.

Designation	Suit Rail	Rail Foot Width	Drawing
2211 Not adjustable	RE68kg / 136lb	152mm	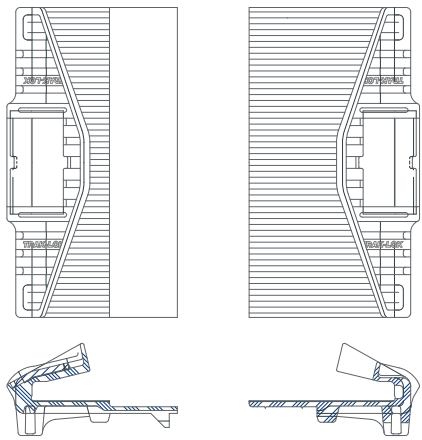
2212 Not adjustable	AS53kg, AS60kg	146mm	
2213 Not adjustable	AS41kg, AS47kg and AS50kg	127mm	
2209 Not adjustable	RE115 / 119lb	5.5”	
2234 Not adjustable	AS31 / DKA42	108mm	
2237 Not adjustable	RE100	5.375”	
2208 Gauge Adjustable	NZR50kg	132mm	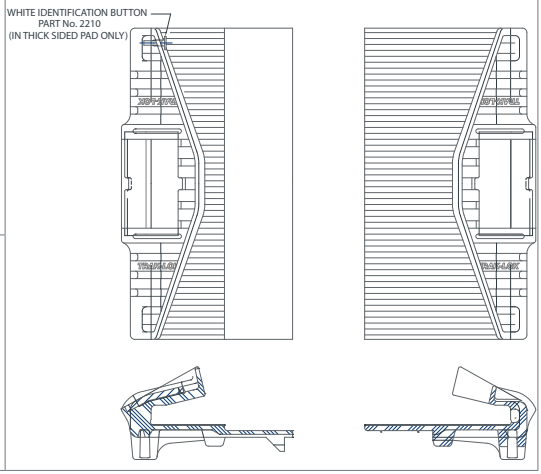
2214 Gauge Adjustable	AS41kg, AS47kg and AS50kg	127mm	

Designation	Suit Rail	Rail Foot Width	Drawing
2217 Not adjustable used at Insulated Joints	RE68kg / 136lb	152mm	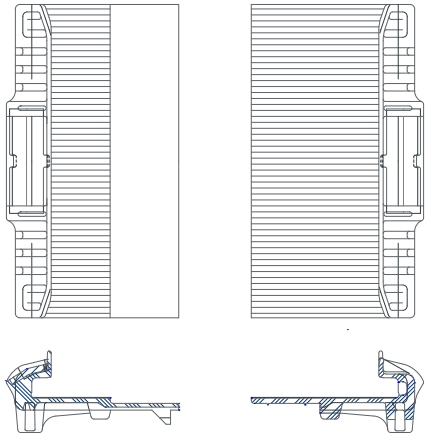
2218 Not adjustable used at Insulated Joints	AS53kg, AS60kg	146mm	
2219 Not adjustable used at Insulated Joints	AS41kg, AS47kg and AS50kg	127mm	
2220 Gauge adjustable used at Insulated Joints	NZR50kg	132mm	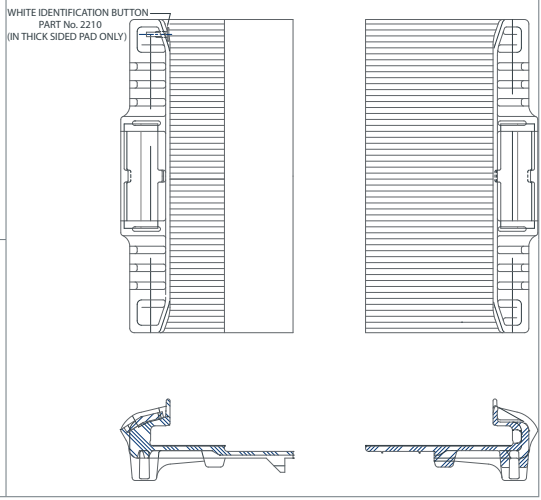
2221 Gauge adjustable used at Insulated Joints	AS41kg, AS47kg and AS50kg	127mm	

TRAK-LOK SPACERS

The Trak-Lok Fastening System includes a range of both insulated and non-insulated spacers to allow the use of various rail sizes in the one seat.

All spacers are manufactured in accordance with AS 1085.19-2003.

Insulated Spacers

Part Number	Where Used	Drawings
2509	This Spacer (2 off required per rail seat) locates AS47 or AS50 rails in 146mm Insulated Rail Seat in association with Insulated Pad Part No 2212. This Spacer (2 off per rail seat) also locates AS31 rails in an AS41 Insulated rail seat in association with Insulated Pad Part No's 2213 & 2214.	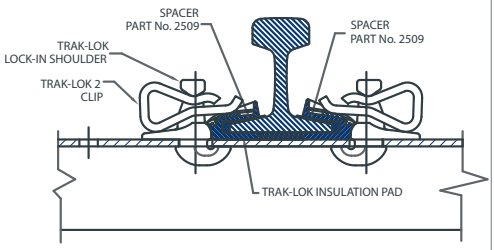
2518	This Spacer located on the "Field" side of DKA42 rails in 127mm Insulated Rails Seat in association with Insulation Pad Part No 2213 and Spacer Part No 2518.	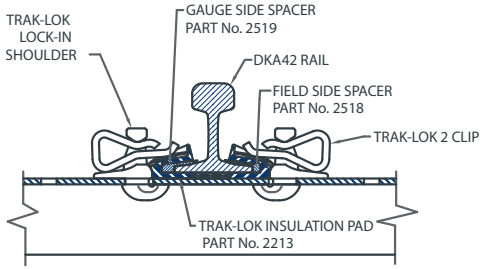
2519	This Spacer located on the "Gauge" side of DKA42 rails in 127mm Insulated Rails Seat in association with Insulation Pad Part No 2213 and Spacer Part No 2518.	
2557	This Spacer located on the "Field" side of WA60lb rails in 127mm Insulated Rail Seat in association with Insulated Pad Part No 2213 and Spacer Part No 2509.	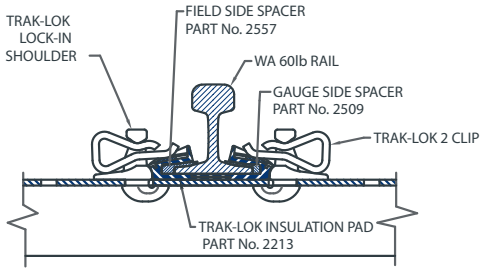
2534	This Spacer locates AS47 or AS50 rails at joints in 146mm Insulated Rail Seat in association with Joint Insulation Pad Part No 2218.	

Non-Insulated Spacers

Part Number	Where Used	Drawings
2517	This Spacer located on the "Field" side of DKA42 rails in an AS41 rail seat in conjunction with Spacer Part No 2252.	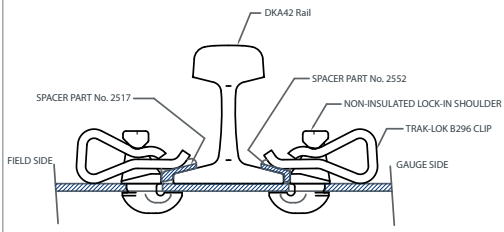
2521	This Spacer located on the "Field" side in conjunction with Spacer Part No 2522 located on the "Gauge" side used to locate WA60lb rails in rail seats designed for AS41 rails.	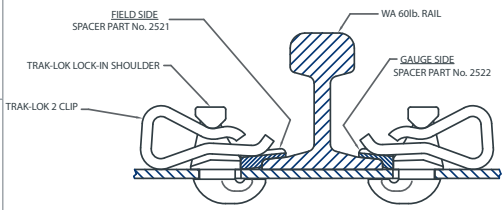
2522	This Spacer located on the "Gauge" side in conjunction with Spacer Part No 2521 located on the "Field" side used to locate WA60lb rails in rail seats designed for AS41 rails.	
2528	This Spacer (2 off per rail seat) used to locate AS31 rails in rails seats designed for AS41 rails.	
2529	This Spacer (one per sleeper used to maintain gauge when used with AS41 or AS47/50 rails in rail adjustable steel sleepers.	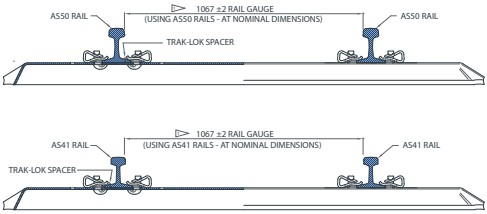
2530	This Spacer (2 off per rail seat) used to locate AS47 / AS50 rails in rails seats designed for AS53 / AS60 rails.	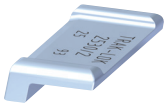
2535	This Spacer (2 off per rail seat) used to locate AS31 rails in rails seats designed for AS41 rails at Fishplated Joints.	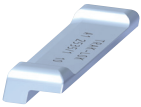

Part Number	Where Used	Drawings
2537	This Spacer (2 off per rail seat) used to locate AS47 / AS50 rails in rails seats designed for AS53 / AS60 rails at Fishplated Joints.	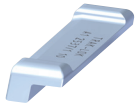
2545	This Spacer located on the "Field" side in conjunction with Spacer Part No 2554 located on the "Gauge" side used to locate NSW60B (1896) rails in rail seats designed for AS53 rails.	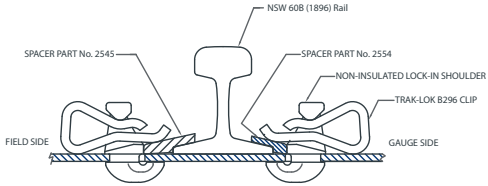
2551	This Spacer located on the "Field" side in conjunction with Spacer Part No 2552 located on the "Gauge" side used to locate 80A and 80AA rails in rail seats designed for AS53 rails.	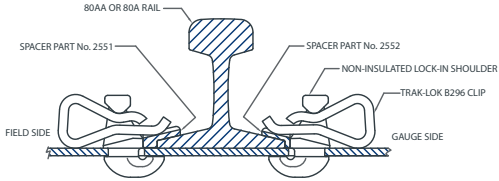
2552	This Spacer located on the "Gauge" side in conjunction with Spacer Part No 2551 located on the "Field" side used to locate 80A and 80AA rails in rail seats designed for AS53 rails.	
2553	This Spacer located on the "Field" side in conjunction with Spacer Part No 2554 located on the "Gauge" side used to locate AS31 (60lb) rails in rail seats designed for AS53 rails.	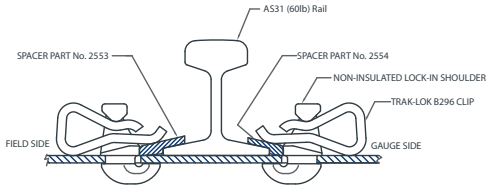
2554	This Spacer located on the "Gauge" side in conjunction with Spacer Part No 2553 located on the "Field" side used to locate AS31 (60lb) rails in rail seats designed for AS53 rails.	

Part Number	Where Used	Drawings
2555	This Spacer located on the "Field" side in conjunction with Spacer Part No 2556 located on the "Gauge" side used to locate QR41.25lb or NSW71.5D rails in rail seats designed for AS53 rails.	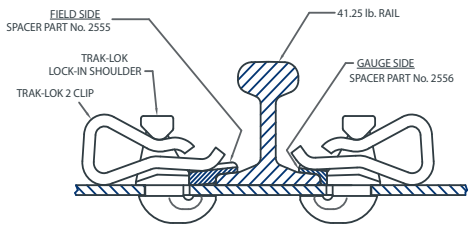
2556	This Spacer located on the "Gauge" side in conjunction with Spacer Part No 2555 located on the "Field" side used to locate QR41.25lb or NSW71.5D rails in rail seats designed for AS53 rails.	
2570	This Spacer (2 off per rail seat) used to locate AS50 rails in rail seats designed for AS60 rails.	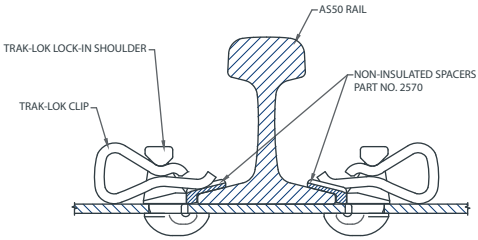

NOTE: Other Spacer configurations can be designed to suit special specific installation requirements.

Customers to check Spacer availability prior to ordering as tooling for Spacers may be life expired and require replacement.

Spacer Dimensions

Spacer	Width		Angle	F/Plate Joint Spacer	Width		Angle
	Dist (mm)	Tolerance (mm)			Dist (mm)	Tolerance (mm)	
Insulated Spacers							
2509	9.5	+/- 0.1	12.5 deg				
2518	5.0	+/- 0.1	12.5 deg	2534	9.5	+/- 0.1	12.5deg
2519	12.0	+/- 0.1	12.5 deg				
2557	16.5	+/- 0.1	12.5 deg				
Non-Insulated Spacers							
2517	11.1	+/- 0.5	13 deg 0’				
2521	17.5	+/- 0.5	5 deg 43’				
2522	9.0	+/- 0.5	13 deg 12’				
2528	9.5	+/- 0.5	11deg 18’	2535	9.5	+/- 0.5	11deg 18’
2529	6.5	+/- 0.5	11deg 18’				
2530	9.5	+/- 0.5	11deg 18’	2537	9.5	+/- 0.5	11deg 18’
2545	30.0	+/- 0.5	13 deg 30’				
2551	14.0	+/- 0.5	13 deg 0’				
2552	5.0	+/- 0.5	13 deg 0’				
2553	24.0	+/- 0.5	11deg 18’				
2554	14.0	+/- 0.5	11deg 18’				
2555	20.5	+/- 0.5	6 deg 0’				
2556	4.8	+/- 0.5	6 deg 0’				
2570	9.5	+/- 0.5	14 deg 0’				

Common Spacer Configurations

53kg rail steel sleeper system

	Design Rail Size	Head Width	Rail Height	Rail Foot Width
Rail to be Fitted	53kg	70	157.1	146

Rail Size	Head Width	Rail Height	Rail Foot Width	Ins or NI	Gauge Side Spacer No.	Field Side Spacer No.	Gauge achieved	Where Commonly Used
47kg Rail	70	141.3	127	NI	2530	2530	nom	Common
50kg Rail	70	154	127	NI	2530	2530	nom	Common
41kg Rail	63.5	136.5	127	NI	2552	2551	nom	Common
80AS”A” 1900	63.5	127	127	NI	2552	2551	nom	Common
80B 1928	63.5	136.5	127	NI	2552	2551	nom	Common
80A^A 1907	63.5	128.6	127	NI	2552	2551	nom	Common
31kg Rail	63.5	117.5	108	NI	2554	2553	-1mm	Common
60B 1896	57.9	109.5	101.6	NI	2554	2545	-1mm	NSW
60AS B^A 1907	57.9	111.1	101.6	NI	2554	2545	-1mm	NSW
71 1/2 1875	57.1	120.6	120.6	NI	2556	2555	-1mm	NSW
47kg Rail	70	141.3	127	Ins	2509	2509	nom	Common
50kg Rail	70	154	127	Ins	2509	2509	nom	Common

50kg rail steel sleeper system

Design Rail Size	Head Width	Rail Height	Rail Foot Width
50kg	70	154	146

Rail to be Fitted

Rail Size	Head Width	Rail Height	Rail Foot Width	Ins or NI	Gauge Side Spacer No.	Field Side Spacer No.	Gauge achieved	Where Commonly Used
WA 60lb	53.9	115	101.6	Ins	2509	2557	nom	WA

47kg rail steel sleeper system

Design Rail Size	Head Width	Rail Height	Rail Foot Width
47kg	70	141.3	127

Rail to be Fitted

Rail Size	Head Width	Rail Height	Rail Foot Width	Ins or NI	Gauge Side Spacer No.	Field Side Spacer No.	Gauge achieved	Where Commonly Used
WA 60lb	53.9	115	101.6	Ins	2509	2557	nom	WA

41kg rail steel sleeper system

Design Rail Size	Head Width	Rail Height	Rail Foot Width
41kg	63.5	136.5	127

Rail to be Fitted

Rail Size	Head Width	Rail Height	Rail Foot Width	Ins or NI	Gauge Side Spacer No.	Field Side Spacer No.	Gauge achieved	Where Commonly Used
31kg	63.5	117.5	108	NI	2528	2528	nom	Common
DKA 42kg	68.5	138	110	NI	2517*	2552	-1mm	Tasmania
60B or 63lb	63.5	117.5	108	NI	2528	2528	nom	Tasmania
75lb	61.9	122.2	122.2	NI	Nil	2556	-2mm	Tasmania
WA 60lb	53.9	115	101.6	NI	2522	2521	nom	WA
31kg	63.5	117.5	108	Ins	2509	2509	nom	Common
DKA 42kg	68.5	138	110	Ins	2519	2518	nom	Tasmania
60B or 63lb	63.5	117.5	108	Ins	2509	2509	nom	Tasmania
75lb	61.9	122.2	122.2	Ins	Nil	2518	-1mm	Tasmania

* Tooling not available for this Spacer at the present time.

60lb rail steel sleeper system

Design Rail Size	Head Width	Rail Height	Rail Foot Width
60lb	63.5	117.5	108

Rail to be Fitted

Rail Size	Head Width	Rail Height	Rail Foot Width	Ins or NI	Gauge Side Spacer No.	Field Side Spacer No.	Gauge achieved	Where Commonly Used
41.25lb	47.6	93.7	82.6	NI	2556	2555	nom	QR

TURNOUT BEARERS AND SPECIAL TRACKWORK

OneSteel Manufacturing (OSM) also supplies both Insulated and Non-Insulated steel bearers for turnouts, splay rails and guard rail sleepers to meet customer designs and customer supplied drawings. Steel bearers enable rapid assembly of turnouts whilst ensuring the geometry of the turnout is achieved and provide similar benefits of steel sleepers.

TRAK-LOK INSTALLATION AND REMOVAL TOOLS

Trak-Lok steel sleeper systems come complete with a full range of tools to enable the safe application and removal of Trak-Lok Resilient Fastening Clips.

Part Number	Where Used	Drawings
2802	Installation of B296, B286 and Zip9 Trak-Lok Clips. Supplied with straight handle.	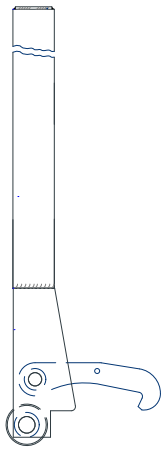
2810	Installation of B296, B286 and Zip9 Trak-Lok Clips. Supplied with T handle.	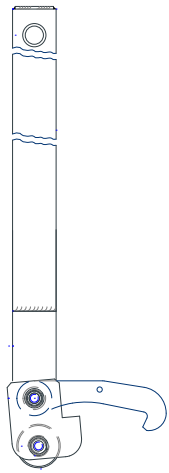

Part Number	Where Used	Drawings
2803	Installation of B296, B286 and Zip9 Trak-Lok Clips. For use in dual gauge track.	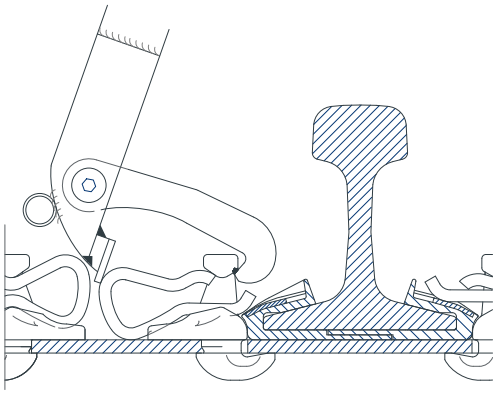
2809	Installation of B296, B286 and Zip9 Trak-Lok Clips. Supplied with angled handle.	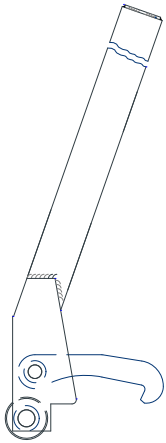
2902	Removal of B296, B286 and Zip9 Trak-Lok Clips.	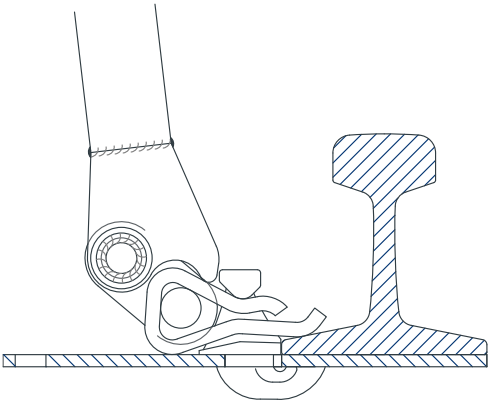

Part Number	Where Used	Drawings
2903	Removal of S193L Trak-Lok Clips.	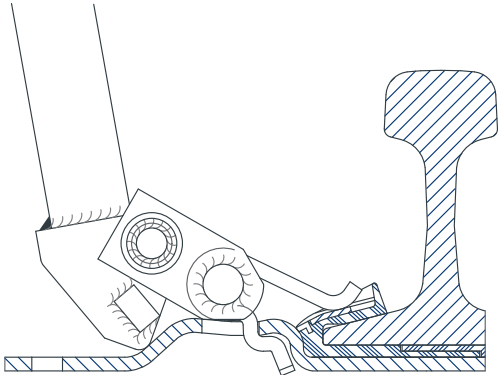
2904	Removal of S195L Trak-Lok Clips on rails with a 108mm rail foot.	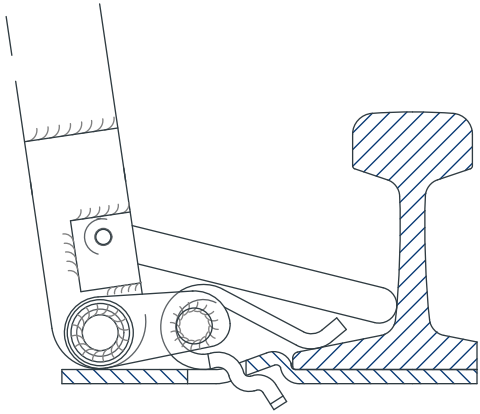
2905	Removal of JS195L Trak-Lok Clips on rails with a 108mm rail foot.	
2913	Removal of S195L Trak-Lok Clips on rails with a 127mm rail foot.	
2914	Removal of JS195L Trak-Lok Clips on rails with a 127mm rail foot.	
2906	Removal of S187L Trak-Lok Clips on rails with a 127mm rail foot.	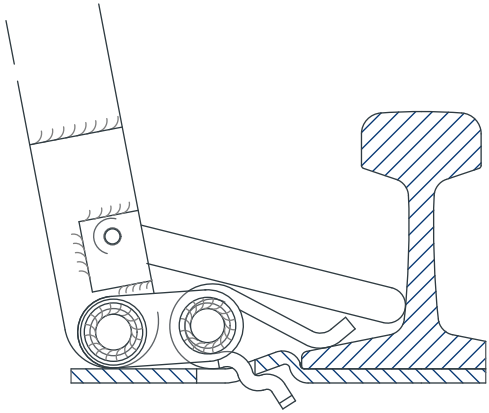
2919	Removal of JS187L Trak-Lok Clips on rails with a 127mm rail foot.	

Part Number	Where Used	Drawings
2912	Removal of S187L and S195L Trak-Lok Clips on flat Trak-Lok steel sleepers using ballast inspection holes.	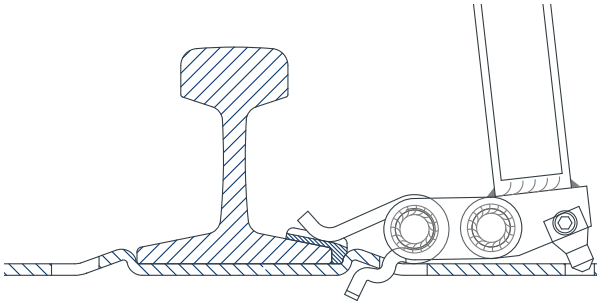

Spare Parts

Part Number	Where Used	Drawings
2806 MK A	Hook Assembly as replacement on Part No's 2802, 2803 and 2809.	
2806 MK B	Roller Assembly as replacement on Part No's 2802 and 2809.	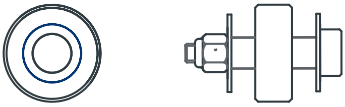

Motorised Application Machines

Trak-Lok 2 Clips can be installed and removed using specialised application/removal machines. These machines range in size from push along trolleys to ride on high production machines. For further details please contact your OneSteel Manufacturing representative.

CAST SLEEPER PLATES

Sleeper Plate Type

Sleeper Plates are manufactured to suit 127mm or 146mm rail foot sizes.

Sleeper Plates are designated as follows:

DSTB – Double Shouldered, Taper Base (1 in 20) Sleeper Plate

DSLB – Double Shouldered, Flat Base Sleeper Plate

Other negotiated types can be produced by OneSteel Manufacturing to customer specifications which are not covered by the standard defined below.

Standards

AS1085 Part 3 – Sleeper Plates.

Hole Sizes

All holes are located in accordance with Liberty drawings. Holes are provided in varying configurations to suit the customers fastening requirements. Each sleeper plate has a designated "DF" number that is used to identify the sleeper plate.

When ordering sleeper plates it is only the abbreviated designation as per the drawing heading that is required to be quoted eg. 127 DSTB DF27.

Table of Sleeper Plates

Designation	Drawing Number	Unit Mass (kg)	Plate Width (mm)	Plate Length (mm)	Dog Spike Hole (mm)	Lock Spike Hole (mm)
127 DSLB – DF46	2701	4.49	295	178	18 Square	18 Square
127 DSLB – DF100	2702	7.02	295	203	21 Square	21 Square
127 DSLB – DF68	2700	7.02	295	203	24 Round	18 Square
127 DSTB – DF4	2704	5.01	295	178	18 Square	18 Square
127 DSTB - DF27	2721	5.01	295	178	20.6 Square	17.5 Square
127 DSTB – DF3	2719	5.01	295	178	21 Square	21 Square
127 DSTB – DF3L	2719	TBA	295	203	21 Square	21 Square
127 DSTB – DF10	2705	5.63	295	203	24 Round	18 Square
146 DSLB - DF69	2703	7.07	314	203	24 Round	18 Square
146 DSTB – DF25	2707	TBA	315	180	21 Square	21 Square
146 DSTB – DF25L	2707	6.15	315	205	21 Square	21 Square
146 DSTB – DF30	2706	6.19	315	205	24 Round	18 Square

127 DSLB - DF46

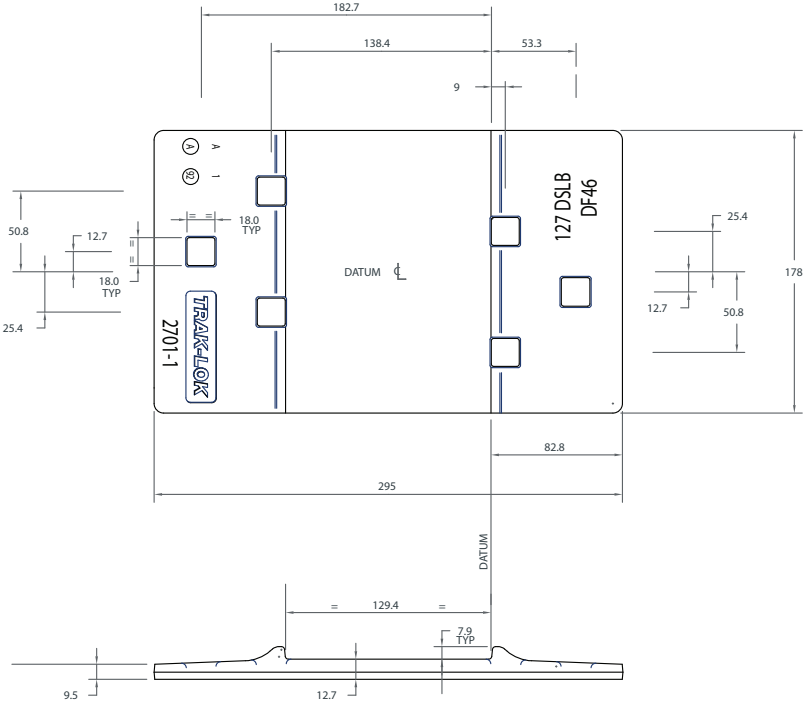

127 DSLB - DF100

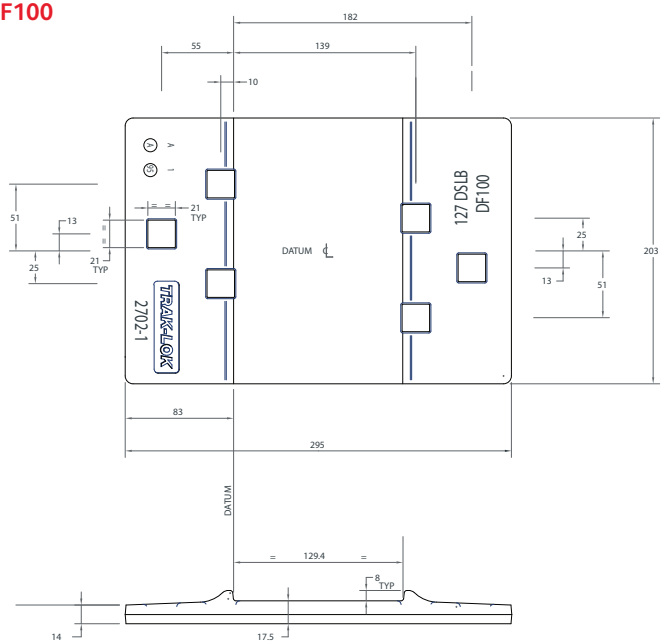

127 DSLB - DF68

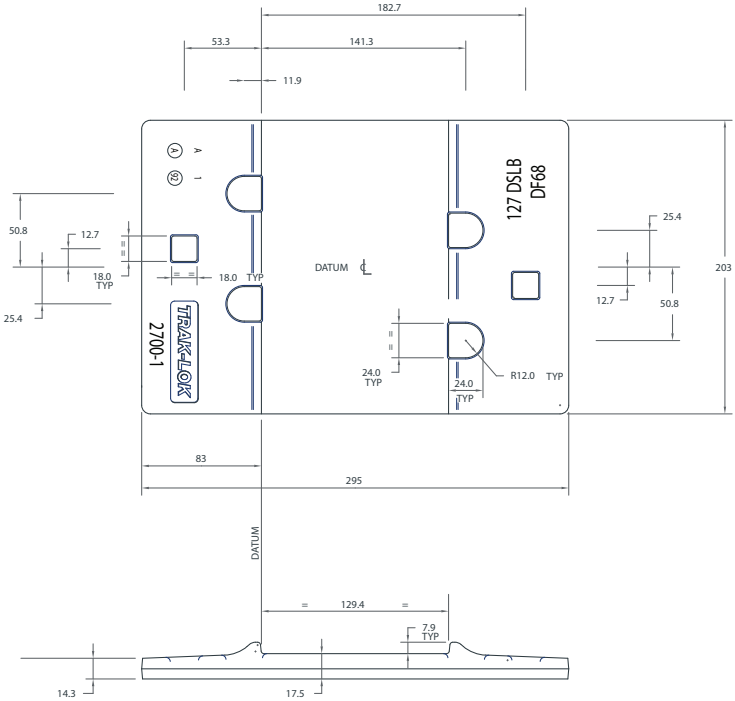

127 DSTB - DF4

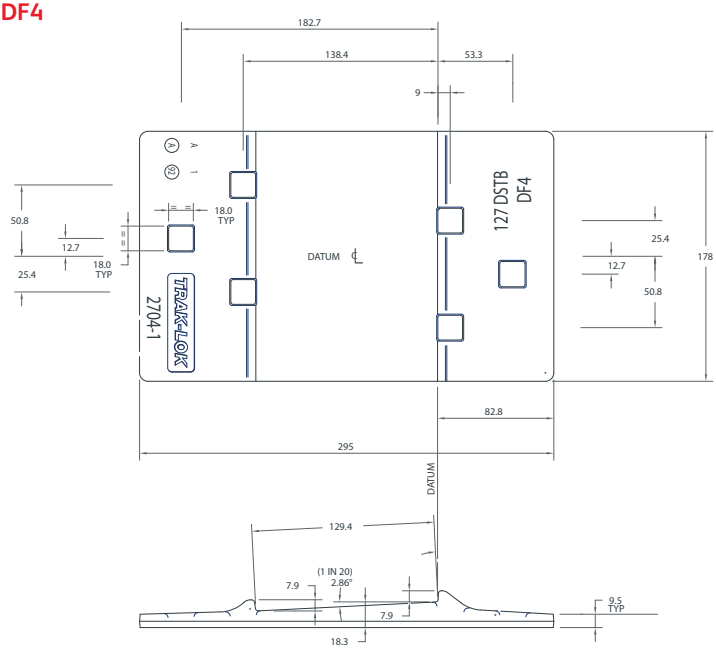

127 DSTB - DF27

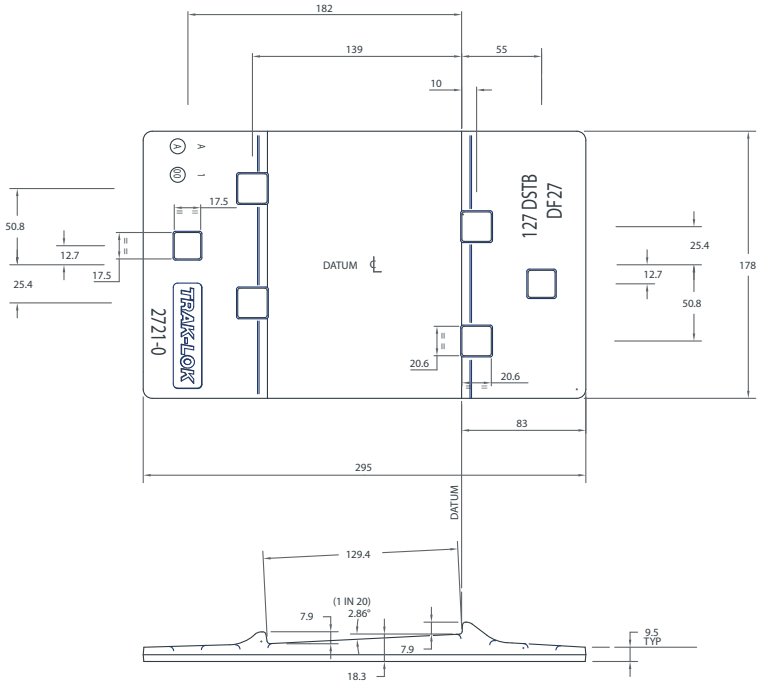

127 DSTB - DF3 & DF3L

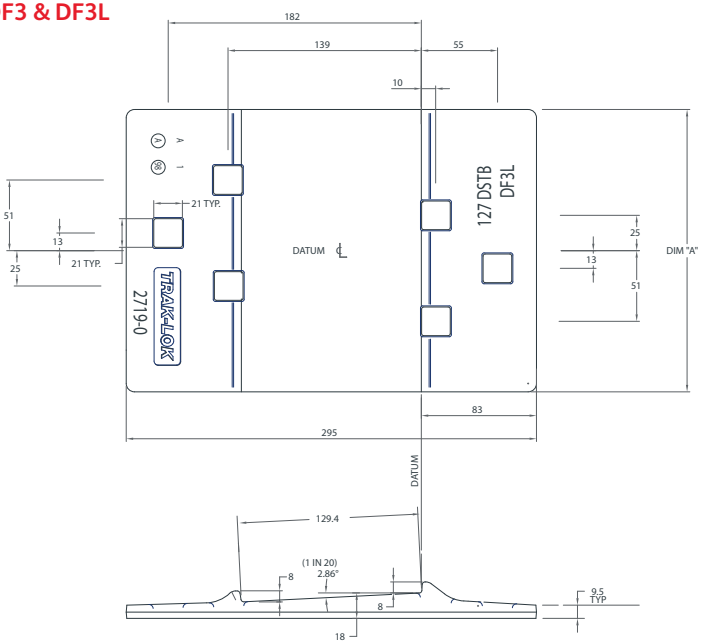

127 DSTB - DF10

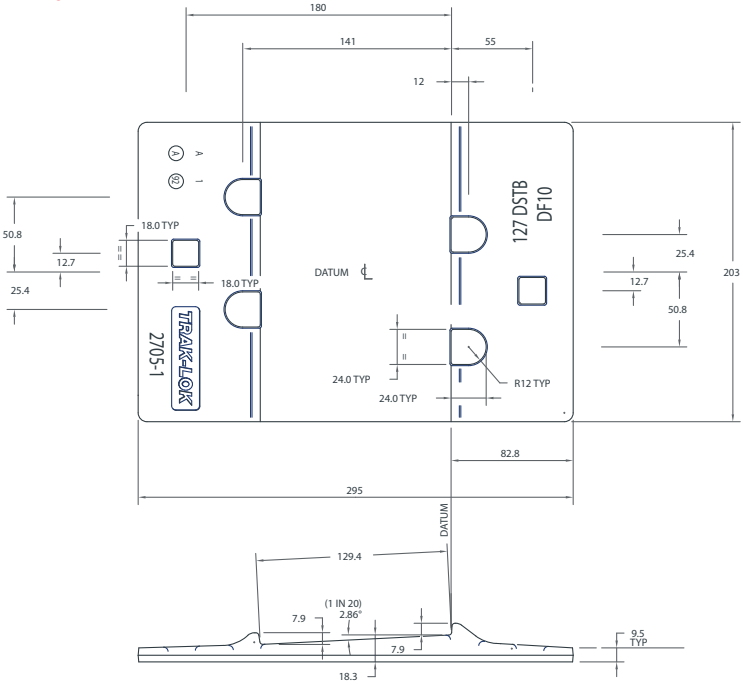

146 DSLB - DF69

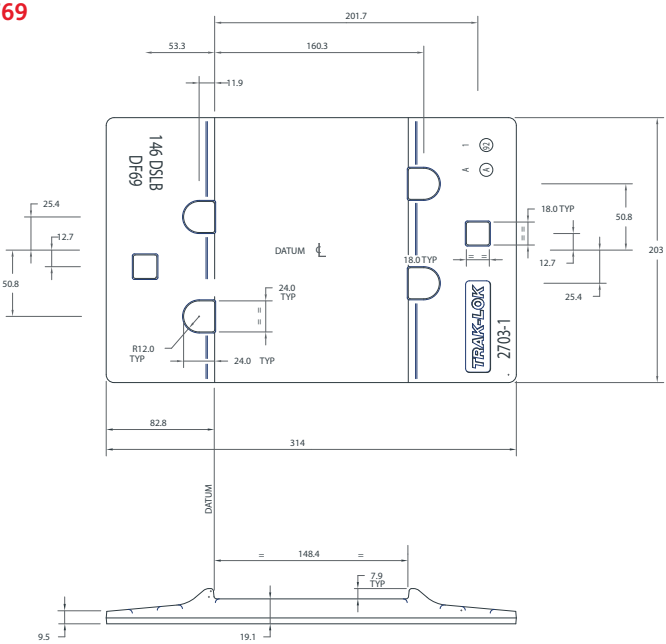

146 DSTB - DF25 & DF25L

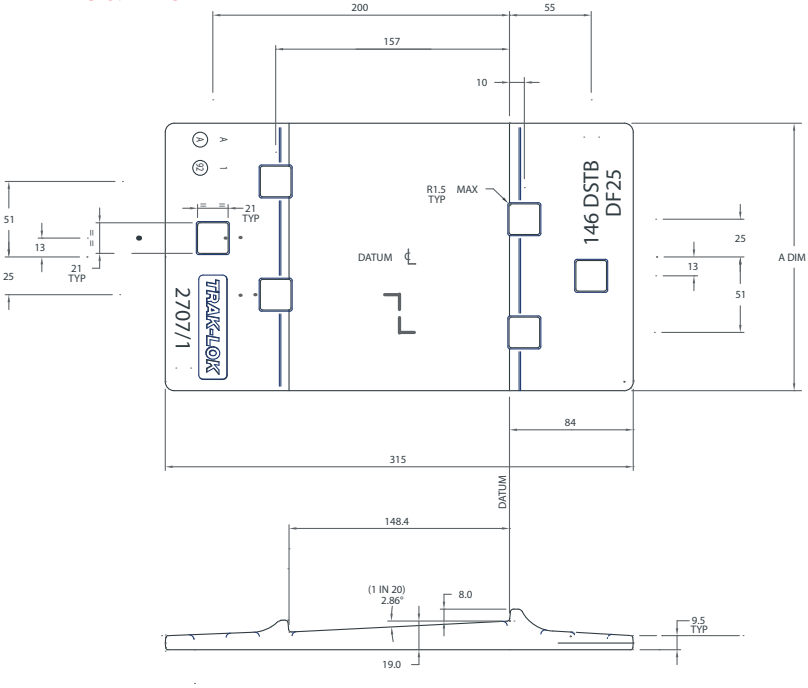

146 DSTB - DF30

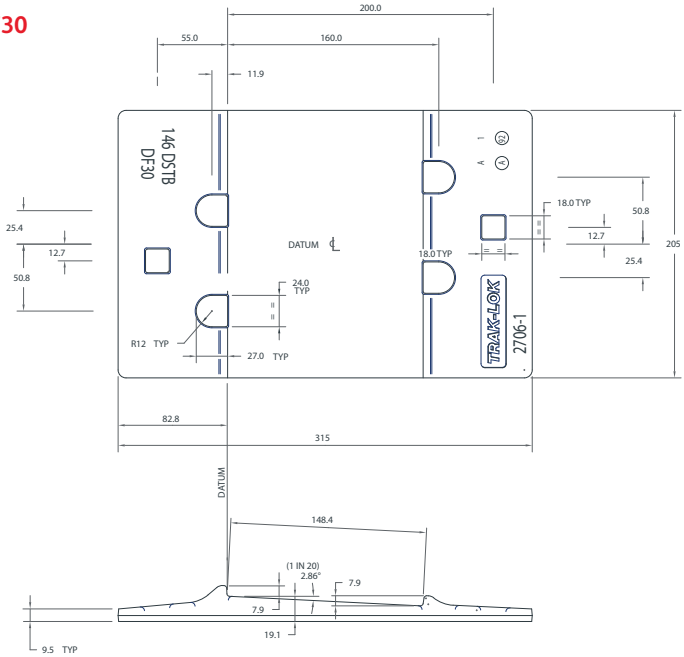

NOTES

NOTES

OneSteel Manufacturing
Pty Ltd (Administrators Appointed)

OneSteel Manufacturing Pty Ltd

For sales enquiries and/or product information:
T: 1800 161 199
E: OSM Rail Customer Service

This publication has been prepared by OneSteel Manufacturing Pty Limited (Administrators Appointed) ABN 42 004 651 325). Please note that the specifications and technical data are subject to change without notice and to ensure accuracy, users of this publication are requested to check the information to satisfy themselves and not to rely on the information without first doing so. Unless required by law the company cannot accept any responsibility for any loss, damage or consequence resulting from the use of this publication. Photographs shown are representative only of typical applications, current at October 2025. This brochure is not an offer to trade and shall not form any part of the trading terms in any transaction.
Trak-Lok® is a registered trade mark of OneSteel Manufacturing Pty Limited (Administrators Appointed) ABN 42004651 325. ©Copyright 2022.